WINTER–19 EXAMINATION

MODEL ANSWER

22403

Subject: Railway & Bridge Engineering **Subject Code-**

1) The answers should be examined by key words and not as word-to-word as given in the model answer scheme.
2) The model answer and the answer written by candidate may vary but the examiner may try to assess the understanding level of the candidate.
3) The language errors such as grammatical, spelling errors etc… should not be given more Importance (Not applicable for subject English and Communication Skills.
4) While assessing figures, examiner may give credit for principal components indicated in the figure. The figures drawn by candidate and model answer may vary. The examiner may give credit for any equivalent figure drawn.
5) Credits may be given step wise for numerical problems. In some cases, the assumed constant values may vary and there may be some difference in the candidate's answers and model answer.
6) In case of some questions credit may be given by judgment on part of examiner of relevant answer based on candidate's understanding.
7) For programming language papers, credit may be given to any other program based on equivalent concept.

Que. No.	Sub Que.	Answer	Marking Scheme	Total Marks
1		**Attempt any FIVE of the following:**		10
	a) Ans.	**Define permanent way.** **Permanent way:** The permanent way is the combination of ballast; rails, sleepers and Fixtures and fastenings. It consists of a pair of rails fixed to sleepers which rest on ballast.	2	2
	b) Ans.	**List the types of spikes to fix the rails.** i) Dog Spike ii) Screw Spike (Coach Screw) iii) Round Spike (Rough Spike) iv) Elastic Spike	½ mark each	2
	c) Ans.	**Define points and crossing** Points and crossing are the special arrangement provided on rail way track to facilitate trains to be diverted from one track to another.	2	2
	d) Ans.	**State the requirements of rail alignment** i) The alignment should be short and straight. ii) The alignment should be economical. iii) It should take care of obligatory points. iv) Marshy and low-lying areas should be avoided. v) Raw materials for construction should be easily available near the site. vi) It should facilitate easy slope and curve.	1 mark each (Any 2)	2

1	e) Ans.	**List the types of culverts** Types of culverts: 1. Arch culvert 2. Box culvert 3. Slab culvert 4. Pipe culvert	**½ mark each**	**2**
	f) Ans.	**State the classification of station yards** Station yards are classified as follows: i) Passenger Bogie Yard ii) Goods Yard iii) Locomotive Yard iv) Marshalling Yard	**½ mark each**	**2**
	g)	**List the factors affecting size of tunnel** i) Volume and type of traffic. ii) The size of clear opening required. iii) The thickness and allowance of lining. iv) Drainage facilities required.	**1 mark each (Any 2)**	**2**
2		**Attempt any THREE of the following:**		**12**
	a) Ans.	**Describe in brief prevention of creep of rail** Creep Prevention: 1. Pulling back the rails to original position. 2. Use of steel sleepers for good grip. 3. Provision of Anchors/Anti-creepers should be done. 4. By increasing number of sleepers per rail length. 5. Provision of sufficient ballast and packing with care.	**1 mark each (Any 4)**	**4**
	b)	**Draw a neat labelled sketch of permanent way in embankment** 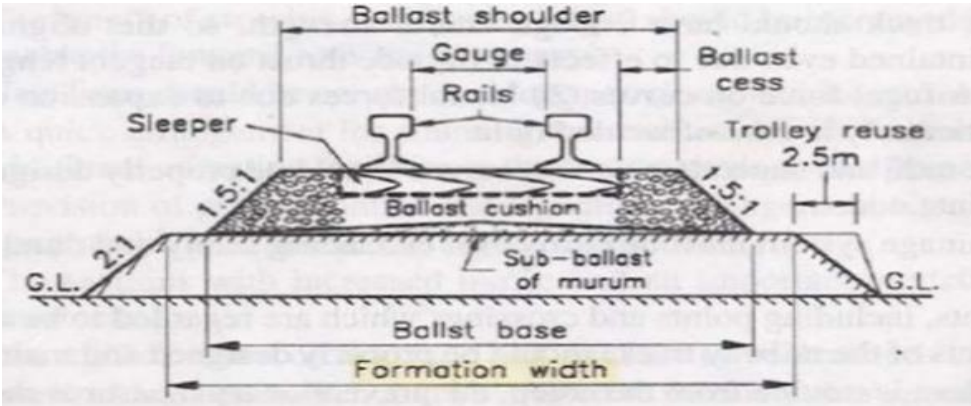 **Cross section of permanent way in embankment (Single track)** **OR**	**3 marks for neat sketch 1 Mark for neat labeling**	**4**

		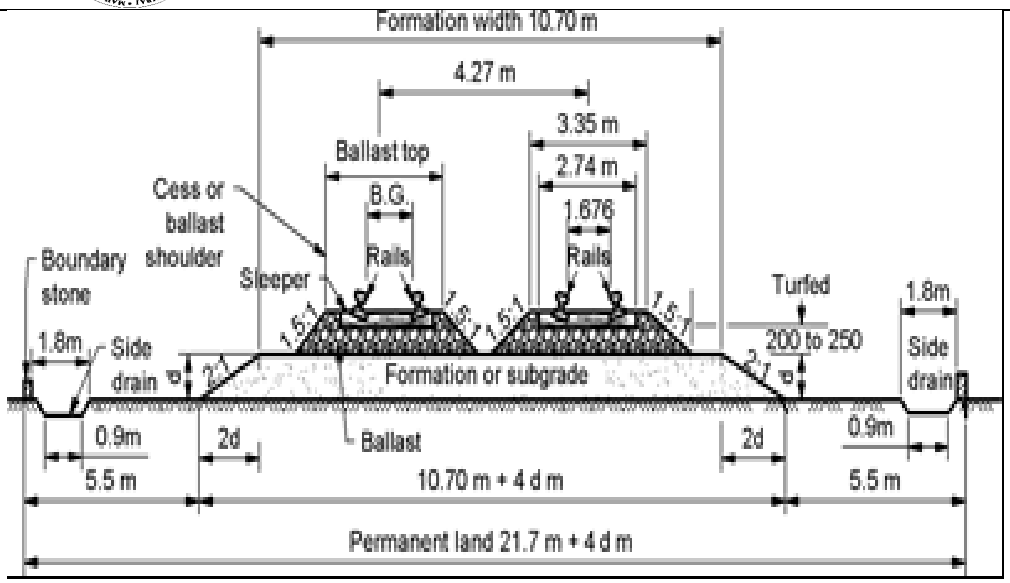 **Cross-section of a double broad gauge track in embankment**		
2	c) Ans.	**Describe in brief caisson foundation for a bridge with neat sketch** **Caisson foundation** A caisson foundation also called as pier foundation is a watertight retaining structure used as a bridge pier in the construction of a concrete dam or for the repair of ships. It is a prefabricated hollow box or cylinder sunk into the ground to some desired depth and then filled with concrete thus forming a foundation. 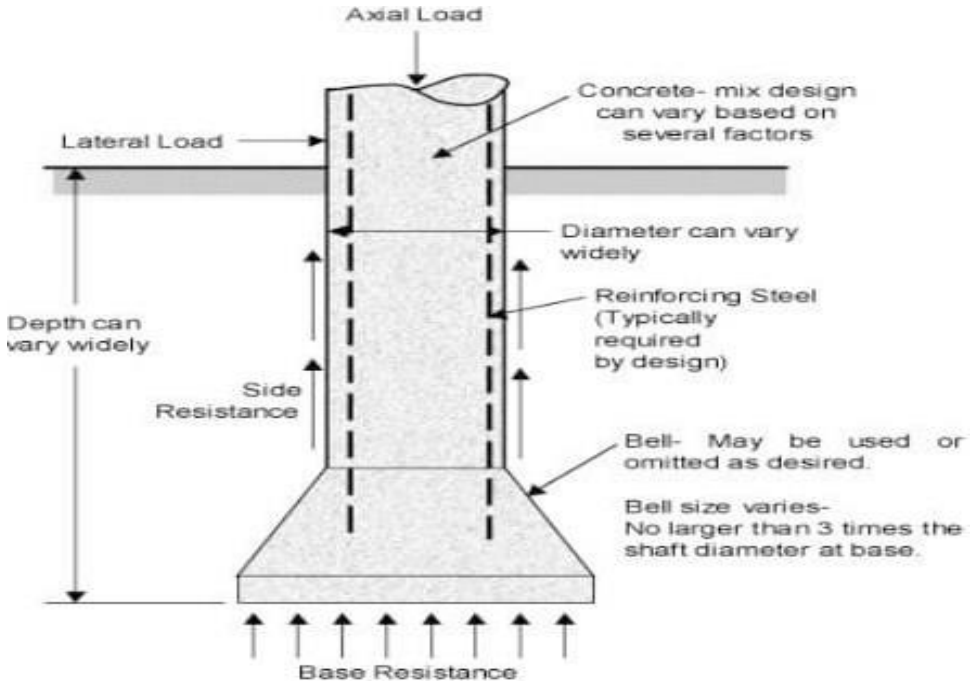	**2 Marks for description** **2 marks for neat sketch**	**4**

	d) Ans.	**Discuss the requirements of a standard rail joint** i) It should be strong, stiff and give same strength as that of the original rail section. ii) Under lateral and varying load, it should maintain the gauge distance of track. iii) It should be cheap and durable. iv) It should not allow rail end to be battered in any case. v) It should absorb shocks and vibrations produced due to movement of train. vi) It should facilitate easy removal and replacement of rails without disturbing the whole track. vii) It should be capable of maintaining the two rails at the same level. viii) It should provide free expansion and contraction due to temperature variation.	**1 mark each (Any 4)**	**4**
3		**Attempt any THREE of the following:**		**12**
	a) Ans.	**Explain in brief expansion bearing for steel girder bridge.** Types of Expansion Bearing: 1. Sliding Plate Bearing 2. Deep cast with curve plate 3. Rocker bearing with curved base 4. Rocker & roller bearing **Types of Expansion Bearing:** 1. **Sliding Plate Bearing**: It consists of sole plate which is provided between main girder and bed plate. It is the simplest type of expansion bearing. 2. **Deep cast with curve plate**: It consists of a sole plate which is fixed to underside of girder. The sole plate rests on a deep cast base with a curved bed plate 3. **Rocker bearing with curved base**: This is the type of rocker bearing. In this type of bearing, the bottom shoe is given a circular shape. 4. **Rocker & roller bearing**: It consist of a rocker pin which is provided between the top shoe and the bottom shoe. Bottom shoe rests on number of steel rollers. **1. Sliding Plate Bearing** 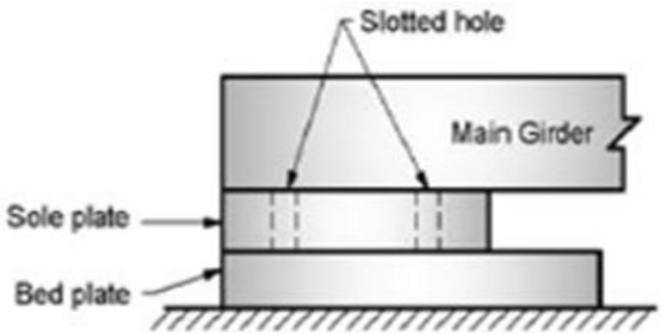 	**1** **2 marks for explanation & 1 mark for figure (Any One)**	

3		2. Deep cast with curve plate 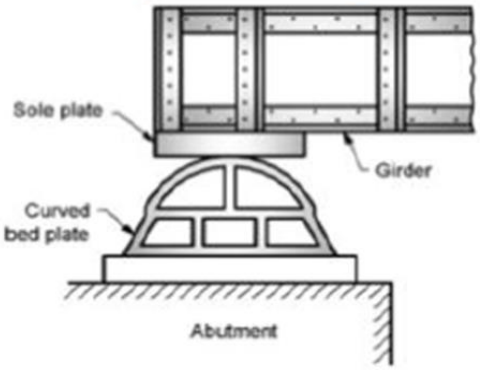 3. Rocker bearing with curved base 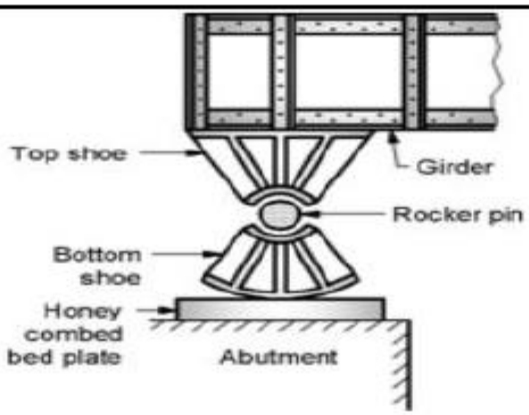 4. Rocker & roller bearing 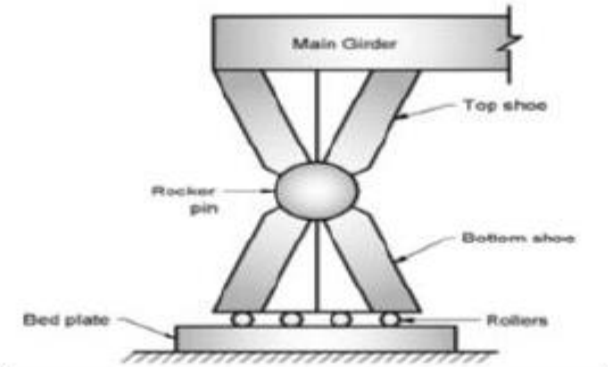 		
	b) **Ans**	**State the functions and requirements of a pier.** **Functions of piers:** i) To divide the length of bridge into suitable number of spans. ii) To transfer the load from bridge superstructure to subsoil through foundations. **Requirements of piers:** 1. It should be easily and cheaply constructed. 2. It should be constructed of durable material.	**2**	**4**

		3. It should have sufficient bearing area at its top to receive the bearings supporting the bridge girder. 4. It should be stable against lateral and longitudinal thrust of water. 5. It should be strong enough to take loads. 6. It should involve less maintenance cost	**2 (Any two points)**	
3	**c)**	**Draw a neat labelled sketch of a plan of bridge showing all its components** 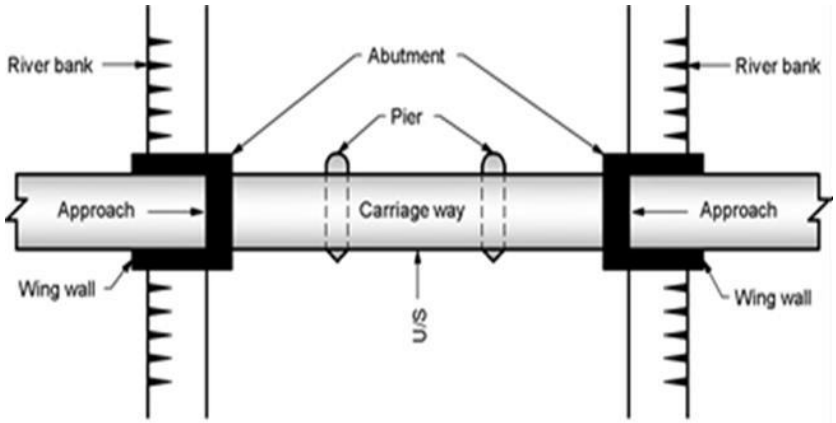 (a) Plan **(Note: 2 Marks for sketch, 2 marks for labelling)**		**4**
	d) **Ans.**	**Define following terms:** **i) Economic span** **ii) Afflux** **iii) Waterway** **iv) Free board** **i) Economic span:** The span for which the total cost of the bridge is minimum is known as economical span of a bridge. **ii) Afflux:** It is the rise in water surface caused due to the obstruction by the bridge in the flow of water. **Or** The heading up of the water above its normal level while passing under the bridge is called afflux. **iii) Waterway:** The sectional area at the site of a bridge through which water flows is termed as waterway. **iv) Free board:** It is the difference between the HFL after allowing the afflux, if any, and the lowest point on the underside of the bridge super structure is called free board.	**1 mark each**	**4**
4		**Attempt any THREE of the following:**		**12**
	a) **Ans.**	**Discuss the advantages and limitation of prestressed bridge.** **Advantages of Prestressed Bridge** **1**) Have higher load carrying capacity 2) Fewer expansion joints 3) Reduced deflection of girders. 4) Lighter construction.	**2 Marks (Any Two)**	

		5) More aesthetic appearance. 6) More effective use of precast members. 7) Better resistance to fatigue due elimination of cracking of its members under severe traffic loads. 8) Less cost of maintenance. **Limitations of Prestressed Bridge** 1) Use of high tensile steel results in high cost. 2) Skill supervision required. 3) Special equipment is required.	**2 Marks (Any Two)**	**4**
4	**b) Ans**	**Differentiate between permanent bridge and temporary bridge**	**1 mark each (any four)**	**4**

Sr. No.	Points of comparison	Permanent bridge	Temporary bridge
1	Initial cost	Initial cost is high	Initial cost is low
2	Structural forms	These bridges are simple as well as complex in their structural forms.	These bridges are simple in their structural forms.
3	Skill required on construction	More skill required for construction	Less skill required for construction
4	Time required in construction	Require more time in construction	Require less time in construction
5	Load carrying capacity	These bridge can take heavy loads	These bridge can take light loads
6	Construction	Difficult in construction	Easy in construction
7	Suitability to traffic	Suitable for heavy traffic	Suitable for light traffic
8	Maintenance cost	High	Low

	c) Ans.	**State the necessity of providing tunnel shaft.** **Necessity of providing tunnel shaft-** 1) To provide opening for removal of muck. 2) To expedite the construction work of the tunnel by starting excavation at several points at the same time. 3) To provide passageway for pumping out the water from the tunnel. 4) To provide natural ventilation during construction of the Tunnel.	**1 each (any four)**	**4**

	d) Ans.	**Suggest suitable situation for Raft foundation and Pile foundation.** **Suitability of Raft foundation:** 1) Where the allowable bearing capacity of soil is less or the bridge load is heavy. 2) Where the hard soil is not available within 1.5m to 2.5m below the river bed. 3) Where soil mass contains compressible soft pockets and there is possibility of unequal settlement. **Suitability of Pile foundation:** 1) Where it is much expensive to provide raft or grillage foundation. 2) Where the soil is very soft and the hard bed is not available at a reasonable depth. 3) Where heavy scouring of river bed is expected. 4) Where heavy concentrated loads are to be taken by foundation.	**2 marks (Any two)** **2 marks (Any two)**	**4**
	e) Ans.	**Explain Pre- monsoon inspection of bridge.** **The Pre- Monsoon inspection shall cover the following points** a) Any sign of settlement of Foundation. b) Check the condition of reinforcement. c) Any sign of development of cracks in concrete abutments and piers. d) Condition of paints. e) Condition of parapet walls. f) Condition of wearing coat and its thickness. g) Behaviour of expansion joints. h) Any sign of scour along with maximum depth of scour. i) Detailed inspection of steel works of girder. j) Obstruction of water way. κ) Inspection of drainage system.	**1/2 Mark each (any Eight)**	**4**
5		**Attempt any TWO of the following:**		**12**
	a) Ans.	**Explain Cant deficiency with its values.** **Cant Deficiency:** The difference between equilibrium cant necessary for maximum permissible speed on curved track and the actual cant provided is known as cant deficiency. It should be as low as possible as higher cant deficiency result in extra pressure, more side wear and creep of outer track and results in discomfort to passenger. For different gauges, cant deficiency prescribed by Indian Railway for speed upto 100 km/hrs is 7.6 cm, 5.1 cm, 3.8 for B. G. M. G and N. G respectively and for speed more than 100 km/hr, it will be 10 cm for B. G. only.	**4** **2**	**6**
	b) Ans.	**Explain coning of wheels with neat sketch** If the flanges of the wheel are flat then due to shocks there will be movement between wheel and the rails and due to which, vehicle will not be maintained in central portion and there will be unequal distribution of load. Therefore, the	**4**	

		flanges are made in the shape of cone with a slope of l in 20. This is termed as coning of wheel. It will also help in decreasing the wear and tear of the flanges and the rail. To prevent rubbing inside face of rail and flanges, the distance between inside edge of flanges kept less than the gauge and thus the pressure is always maintained at the inner edge of rail due to coning of wheel. 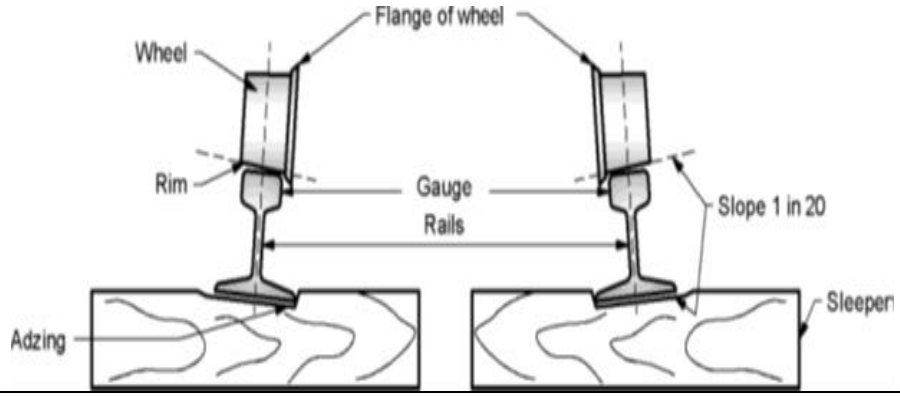	**2**	**6**
	c) Ans.	**Describe the functions of any six tools required for rail track maintenance .** 1) **Cant board:** It is used to check cant on curve. 2) **Wire claw:** It is used to clean the ballast. 3) **Powarah:** It is used to spread ballast. 4) **Hammer:** It is used to drive spikes. 5) **Rail bender:** It is used to bend rail to keep them in desired position. 6) **Jacks:** It is used to lift the track. 7) **Rail Gauge:** It is used to check the rail gauge width. 8) **Sleeper tongs:** It is used to lift the sleepers. 9) **Auger:** It is used to drill holes. 10) **Shovels:** It is used to handle ballast. 11) **Rail tong:** It is used to lift rail. 12) **Claw bar:** It is used to take out spikes from sleeper. 13) **Sledge hammer:** It is used to cut rails by chisel. 14) **Chisel:** It is used to cut the rails. 15) **Beater cum pickaxe:** It is used to pack ballast under the sleepers. 16) **Spanner:** It is used to fix bolts . 17) **Spirit level along with straight edge:** It is used to maintain cross levels of rails.	**1 mark each (Any six)**	**6**

6		**Attempt any TWO of the following:**		**12**
	a) **Ans.**	**State the purpose of providing tunnel lining and state the factors affecting type of lining.** **Purpose of tunnel lining:** 1. To provide the correct desired shape to the tunnel. 2. To support the loosened rock pieces during blasting. 3. To increase the structural strength of soft places in the tunnel. 4. To improve the appearance of tunnel. 5. To prevent percolation of water inside the tunnel. 6. To reduce the maintenance cost of tunnel. 7. To house electrical fitting. 8. To withstand soil pressure when driven in soft rocks. **Factors affecting type of lining:** 1. Type and nature of rocks 2. Purpose for which the tunnel is constructed 3. Funds available 4. Aesthetic consideration.	**1 mark each (Any four)** **2 mark each (Any Two)**	**6**
	b) **Ans.**	**Describe in brief with neat sketch construction of tunnel with needle beam method** In this method stout timber beam known as needle beam is used which forms the main temporary support during the excavation. **Construction steps:** (a) First of all a small drift of about 1 × 1 m is prepared on the working face of tunnel. (b) The roof of this drift is then supported on lagging provided on wooden segments which are carried on the trench jacks as shown in the (c) The needle beam is placed horizontally, whose front end rests on drift and the rear end is supported on vertical stout post. (d) After excavation, the lining is provided to the tunnel section and mucking is done.	**4 marks for procedure and 2 marks for diagram**	**6**

		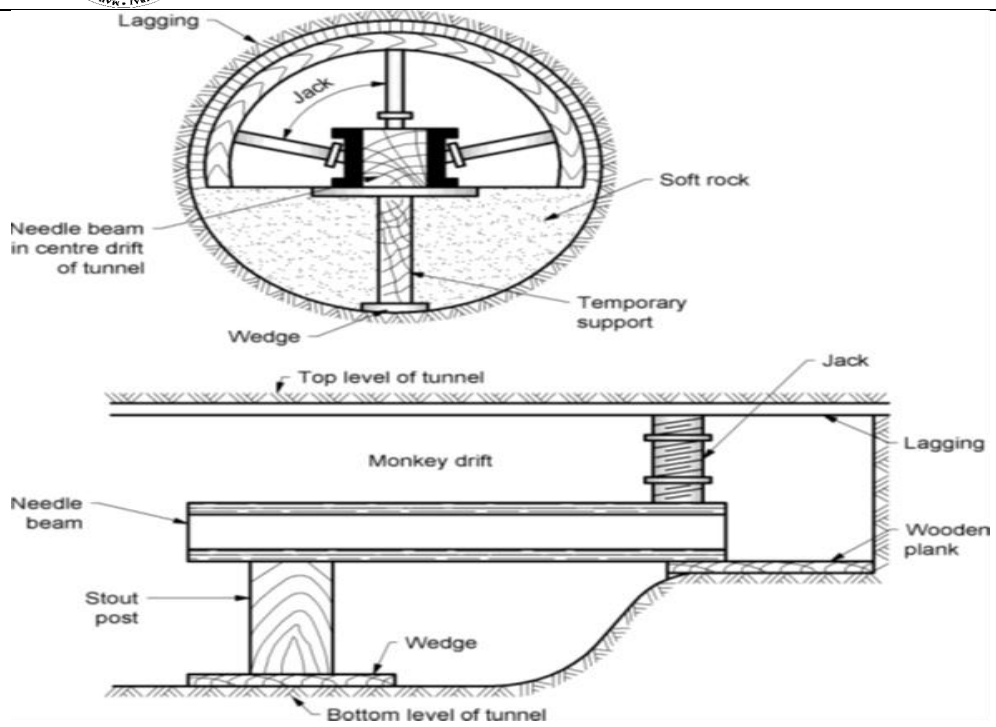		
	c) **Ans.**	**Sate the purpose of tunnel maintenance and discuss the measures to be taken for proper maintenance.** **Purpose of tunnel maintenance:** 1) For safe movement of traffic 2) To avoid accidents during rainy days 3) To increase life of tunnel 4) To use tunnel economically **Measure to be taken for proper maintenance:** 1) The dimensions of tunnel section should confirm with its original dimensions 2) Lining of tunnel should be examined 3) All weep holes are required to clean time to time 4) Side drains should be cleaned time to time 5) Ventilation shaft to be checked 6) Observe the landslides in nearby areas 7) Observe the leak. If it is there, then take preventive measures. 8) Check the conditions of lining.	**2 marks (Any two)** **4 marks (Any four)**	**6**