WINTER-19 EXAMINATION

Subject Name: Consumer Electronics **Subject Code:** 22425

Model Answer

Important Instructions to examiners:

1) The answers should be examined by key words and not as word-to-word as given in themodel answer scheme.
2) The model answer and the answer written by candidate may vary but the examiner may tryto assess the understanding level of the candidate.
3) The language errors such as grammatical, spelling errors should not be given moreImportance (Not applicable for subject English and Communication Skills.
4) While assessing figures, examiner may give credit for principal components indicated in thefigure. The figures drawn by candidate and model answer may vary. The examiner may give credit for anyequivalent figure drawn.
5) Credits may be given step wise for numerical problems. In some cases, the assumed constantvalues may vary and there may be some difference in the candidate's answers and model answer.
6) In case of some questions credit may be given by judgement on part of examiner of relevant answer based on candidate's understanding.
7) For programming language papers, credit may be given to any other program based on equivalent concept.

Q. No.	Sub Q. N.	Answers	Marking Scheme
1	**(A)**	**Attempt any FIVE of the following:**	**10- Total Marks**
	(a)	**Define :** **(i) Fidelity** **(ii) Selectivity**	**2M**
	Ans:	**(i) Fidelity**:-It is defined as the ability of an audio amplifier to reproduce all the sound frequencies faithfully i.e. amplify all of them equally. **(ii) Selectivity:-**It is defined as the ability of human ear to select sound signals of particular frequencies over those of some other frequencies of same intensity.	**1M Each**
	(b)	**Explain impedance matching of PA system.**	**2M**
	Ans:	**Impedance Matching of PA system:-** (i) It is necessary to match the total loudspeaker impedance with the output impedance	**1M each**

		of the power amplifier. It will ensure maximum power transfer to the loudspeakers. (ii)If the output impedance of the output stage of PA system is not matched with total impedance of speaker unit, then it can cause excessive power dissipation, distortion and noise.	**point**
	(c)	**Draw block diagram of Hi Fi amplifier.**	**2M**
	Ans:	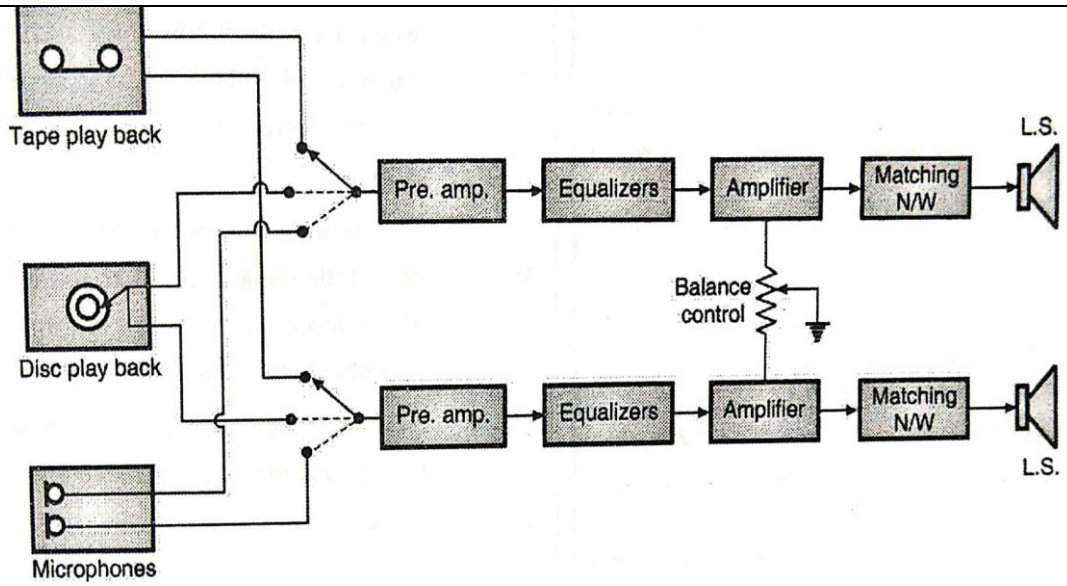 **Fig:- Block diagram of Hi-Fi Amplifier**	**2M Diagram**
	(d)	**Differentiate between positive modulation and negative modulation.**	**2M**
	Ans:	**(Any 2 points) 1 M Each**	**1 M each point**

	Positive Modulation		Negative Modulation
1.	When increase in brightness of that picture results in an increase of the amplitud of modulated envelope.it is called positive modulation.	1.	When increase in brightness reduces amplitude of the modulated envelope, it is called negative modulation.
2.	White level of video signal corresponds to 100% total magnitude.	2.	White level of video signal correspondence to 12.5% of the total amplitude.

3.	Noise pulses do not affect synchronization but cause white spot in the picture	3.	Noise pulses are seen as less annoying black spot.
4.	More power is required with less efficiency	4.	If peak power available from transmitter is considered them less power is required for more efficiency.
5.	Black level of video signal correspondence to 25% of total magnitude.	5.	Blanking level starts at 75%
6.	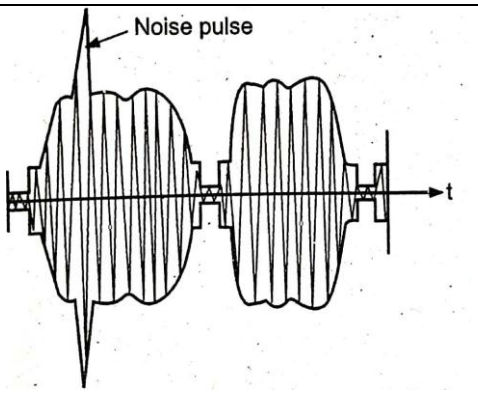 Waveform of positive modulation	**6.**	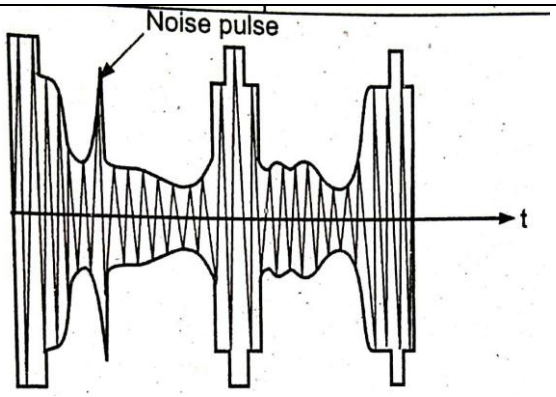 Waveform of Negative modulation
7.	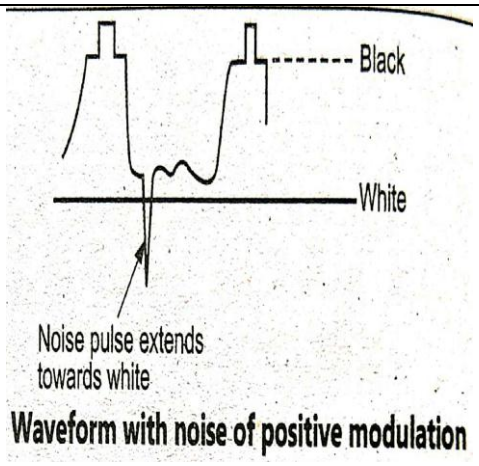	**7.**	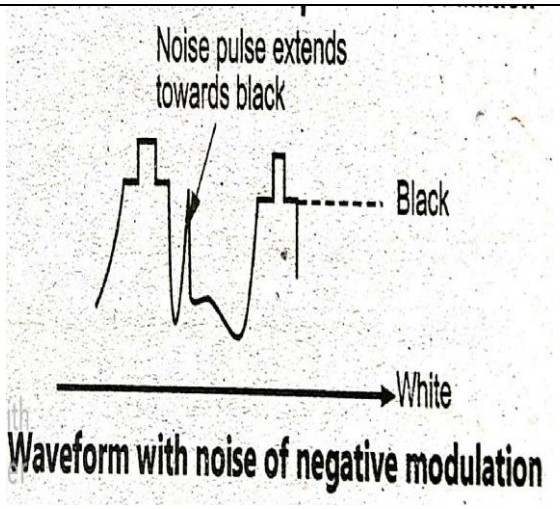

	e)	**List the advantages of OLED.**	**2M**
	Ans:	**(Any two advantages)** **Advantages of OLED:-** (i)Highly economical manufacturing. (ii)Higher efficiency. (iii)Less power consumption. (iv)More brightness and higher contrast. (v)Possible to build foldable OLED displays. (vi)Very short response time(0.01ms)	**1M each**
	f)	**List any two wiring and safety instructions for use of microwave oven.**	**2M**
	Ans:	**Wiring Instructions:-** (i) Red, Black and Green wires should be connected to live, neutral and earth points of three point plug in correct manner. (ii)The three way socket should be wired properly to have a capacity of 15 A. **Safety Instructions:-** (i)The oven should never be used for drying any non-food item like clothes, paper etc. (ii)Never use oven without food items	**1M each**
	g)	**What is the use of pick up device in Digital camera?**	**2M**
	Ans:	**Use of pick up device in Digital camera** :-Pick up device in digital camera is a collection of large number of tiny light sensitive diodes which, act as sensor. It converts optical image into an electric charge image.	**2M**

Q. No.	Sub Q. N.	Answers	Marking Scheme

2		**Attempt any THREE of the following:**	**12- Total Marks**
	a)	**Draw the block diagram and explain the working of photocopier.**	**4M**
	Ans:	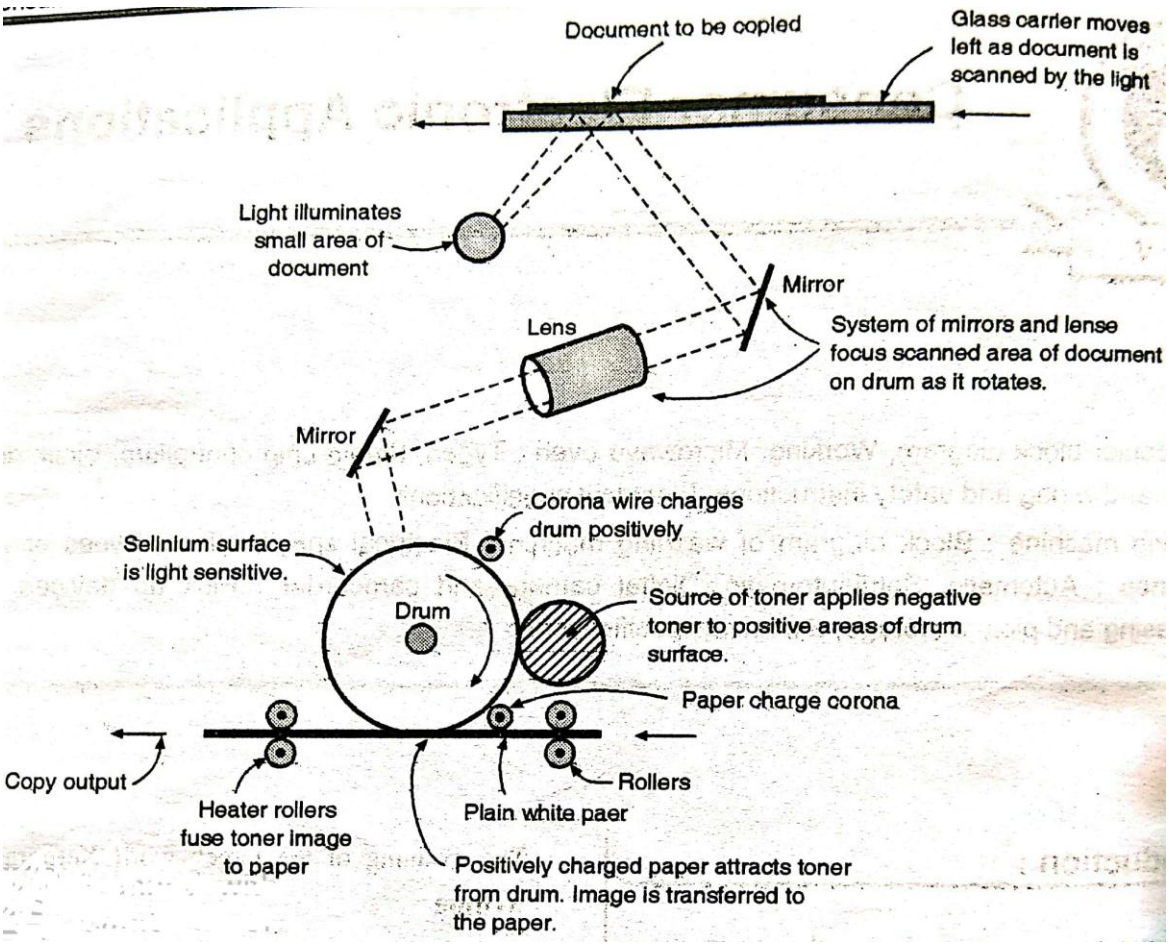 **Working:-** (i)A photocopy machine is an aluminium drum whose surface is coated with light sensitive material such as selenium. (ii)A positive electric charge is given to drum by rotating it adjacent to fine wire (corona)which is spaced closely to the drum surface and connected to high voltage of 6kV to 7kV. (iii)Due to high applied voltage air around corona is ionized which produces a positive electric charge and transferred to drum.	**2M Diagram** **2M working**

		(iii)In this situation if drum is exposed to light, it becomes a good conductor to transfer positive charge to aluminium base of drum. (iv)Once drum is positively charged, the page is scanned by optical lens and mirror and focus light reflected on drum where information is distributed. (v)A toner which is powdered dry ink is applied to drum .Negative charge is given to toner. Due to force of attraction, the negative toner is picked up by positively charged portions of drum surface. Thus image to be copied is present on drum surface. (vi)A positive charge is given to plain white paper in copier mechanism and then passes through heated rollers. (vii)The toner ink melts due to heat and print the image on the paper. (viii)Thus a very high quality copy of the original is produced by the photocopier machine.	
	b)	**Give the troubleshooting procedure of colour TV receiver system.**	**4M**
	Ans:	1. Check the complete TV for any physical damage before connecting to mains. 2. Observe Mains connection chord for damage and continuity. 3. Clean TV set with DRY nylon brush. 4. Check out any dead animal like lizard, cockroach, Rat etc. 5. Identify symptoms of faults. 6. Identify the probable faulty area by symptom in given TV receiver 7. Examine the physical faults in the section (Wire/ track open or Component broken) 8. Check condition of fuse. 9. Observe resistance of each active component on section. 10. Turn on the TV and measure the voltage or current across the component 11. Compare the reading with actual value 12. Find the faulty component. 13. De-solder the component 14. Replace the old component with new component OR 1. Observe given equipment vigorously 2. Clean the equipment. 3. Check the mains chord for wear and tear. 4. Check the external knob for wear and tear. 5. Open the set check for burning smell. 6. Check for live insect, lizard, cockroach 7. Check inside wiring and damage component,	**1M each point**

		8. Clean the set from inside 9. Identify fault area. 10. Do the dry test using multimeter like fuse for open or resistor on so on. 11. Measure corresponding voltage. 12. Replace faulty component.	
	c)	**Describe with the help of diagram the working of crystal type microphone.**	**4M**
	Ans:	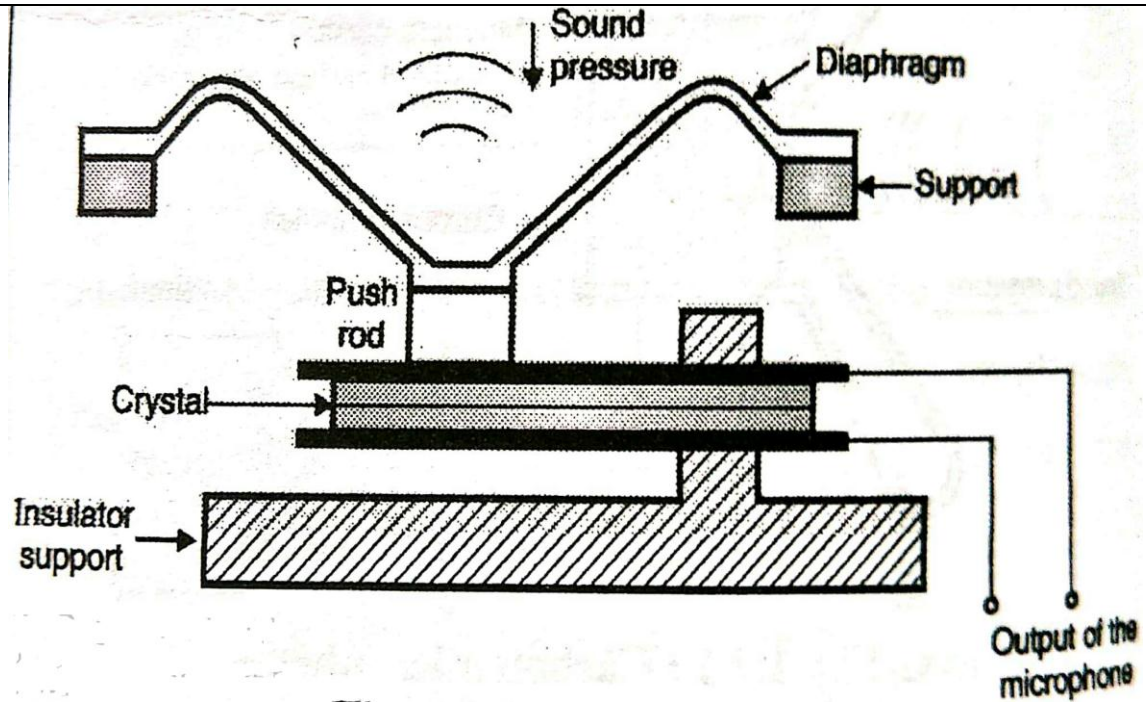 **Fig:- Crystal type microphone.** **Working:-**The crystal microphone works on the principle of piezo electric effect. When pressure is applied to any of these crystals electricity is generated, and if an electric charge is applied to a crystal, it changes shape (Piezoelectric effect). Fig. shows a crystal microphone .An aluminum diaphragm is connected to a crystal unit via push rod, so that the pressure exerted by sound waves on the diaphragm can be passed to crystal unit. Usually two crystal plates are connected ("Bimorph" element) which gives higher output voltage. The crystal unit is well supported by the insulating material rods. The whole unit is enclosed in a protective case. The pressure variations which are passed by the diaphragm to the crystal unit will generate an electric potential which is proportional to applied pressure.	**2M Diagram** **2M working**

	d)	**Explain the working of CD player with block diagram.**	**4M**
	Ans:	**(for any other relevant diagram mark should given)** 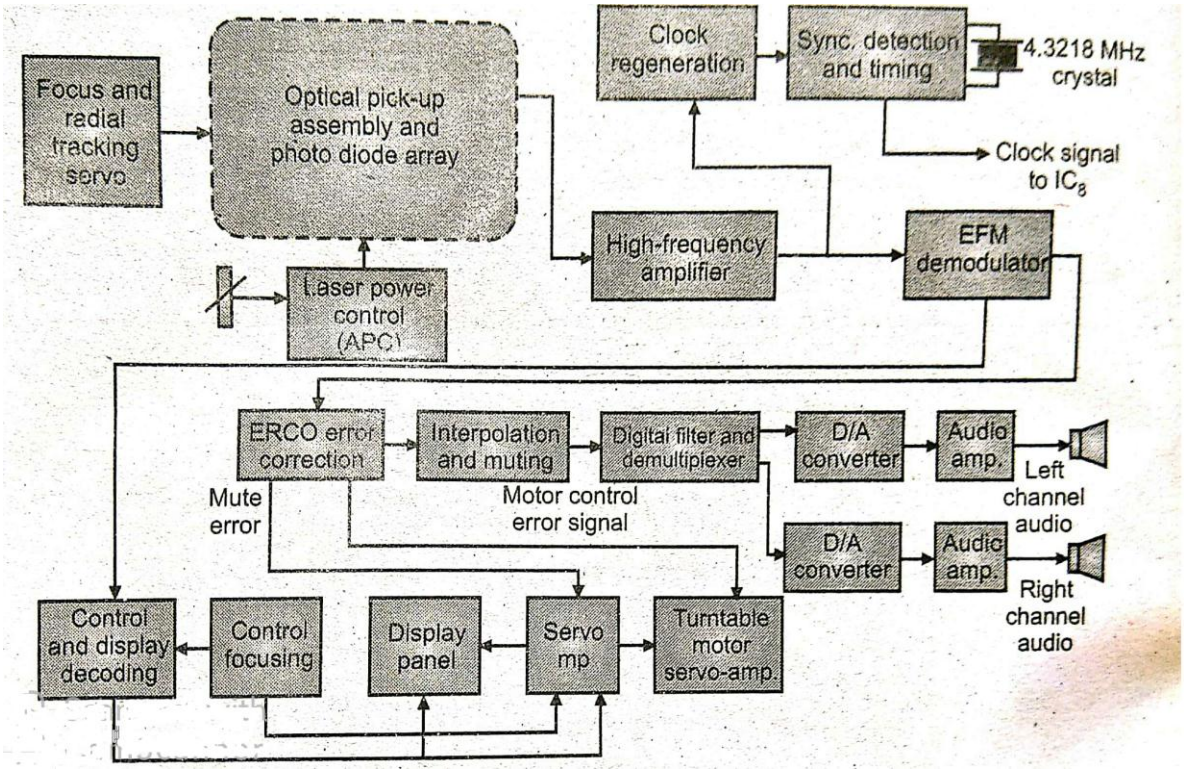 Fig: Block diagram of CD Player **Explanation:--** **CLV**: The CD player is also known as CLV or constant linear velocity system . In a CLV device such as the CD player the rotational speed of disc player is adjusted with movement of reading mechanism on the disc surface . This speed is changed to maintain constant linear velocity i.e. the signal on the disc surface always moves at constant speed of 1.3 m per second under the pick-up head. **Half-Full Memory**: This half –full memory circuit makes the disc to maintain a constant linear velocity when the reading mechanism moves from outer tracks of disc to inner tracks or	**2M Diagram** **2M Explanation**

		from inner tracks to outer tracks on disc surface. **Decoding CD**: During the decoding , the digital data on the disc surface is read by the decoding circuit and is converted into the analog and that signals are required to drive the speakers and regenerate the stored music. **Optical pick-up**: The signal stored on the CD surface as pits and flat areas are first picked up by the optical pickup made of lens assembly, prism , photo detectors and laser diodes assembly in the optical pickup unit. **High frequency amplifier**: The signal is very weak so it is amplified by a high frequency RF amplifier circuit to bring signal to a proper level. This amplified and filtered high-frequency signal contains audio signal as well as synchronization signal in 14-bit EFM (eight to fourteen modulation)format , this signal is sent to an EFM demodulator circuit. **EFM Demodulator**: The EFM modulator separates the modulated data and the timing signal from the signal received at its input. It also removes the additional coupling bits and converts the 14-bit EFM symbol to actual 8-bit data. The amplified and filtered EFM signal from high frequency amplifier is also given to clock generation circuit to synchronize detecting and timing circuit. These circuits are used to recover the bit clock and sync pattern data .The timing separated by this system is used to provide timing signal to the system. **ERCO Circuit**: Demodulated data from EFM demodulator is send to error correction (ERCO)circuit. The demodulated data signals also send to control and display decoding circuit, which recovers the control and display signals which are further multiplexed into signals received from CD. The ERCO circuit mainly used for the error correction & detection. The ERCO circuit will communicate with servo microprocessor to reduce the error generated during CD scanning. **Interpolation and muting**: The ERCO circuit is used for error detection and correction purpose. Any error found in the incoming data signal is send to interpolation and muting section by the ERCO circuit . The interpolation and muting section uses the following methods to correct error found in data stream read from the disc. **CLV using the Clock Signal**: The ERCO also responsible for maintaining constant linear velocity of CD rotation motor , For this , The ERCO circuit compare the clock signal derived from the incoming data with reference clock frequency. **De- interleaving** : Signals from the ERCO contains audio signal in the interleaved format . Before doing any further operation on this signal, it must be interleaved. The signal is then de-interleaved in the interpolation and muting section to restore the original sequence of information. **Digital Filter and De-multiplexer**: The de-interleaved and regenerated is then send to digital filter and de-multiplexer , where it is filtered and separated in to left and right channel data. This circuit removes any effect of sampling frequency from the data signal , which would appear as interference in the form of aliasing noise in analog signal. **Oversampling**: During digital filtering oversampling method is used to remove both problems of aliasing noise and quantization error .	

		D/A convertor: The output from digital filter and de-multiplexer circuit is send to D/A convertors. The right and left channels are processed by different D/A convertors. These convertors convert the 16-bit digital signal into the original analog audio signal. Because of the over sampling , done in the digital filter and de-multiplexer circuit simple low-pass filter is used following the D/A process. **Stereo Amplifier**: The analog output from converter is passed through a sample & hold circuit & a LPF circuit to obtain a smooth noise free output at the speakers. These signals are next fed to a stereo audio amplifier to raise left & right audio channel signal.	

Q. No.	Sub Q. N.	Answers	Marking Scheme
3		**Attempt any THREE of the following :**	**12- Total Marks**
	a)	**Sketch the block diagram of MP3 player.**	**4M**
	Ans:	**Note: For any other Equivalent diagram appropriate marks to be given** 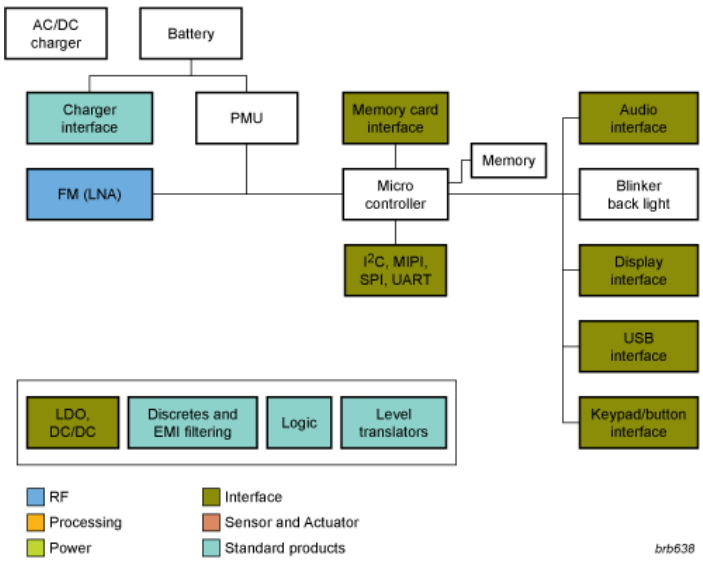 	**4M diagram**
	b)	**Define following with respect to television:** **(i) Aspect ratio** **(ii) Vertical & Horizontal Resolution**	**4M**

		(iii) Interlace scanning (iv) Image continuity	
	Ans:	(i) **Aspect ratio:** The aspect ratio of an image describes the proportional relationship between its width and its height. The frame adopted in all television systems is rectangular with width/height ratio, i.e., aspect ratio = 4/3. (ii) **Vertical & Horizontal Resolution:** The ability of the scanning system to resolve picture details in vertical direction is known as **vertical resolution**. The ability of the scanning system to resolve the picture details in the horizontal direction is known as **horizontal resolution.** (iii) **Interlace scanning:** The total numbers of lines are divided into two groups called 'fields'. Each field is scanned alternately. This method of scanning is called **'interlaced scanning'.** (iv) **Image continuity:** As per the persistence of vision, if the scanning rate per second is made greater than sixteen, or the number of pictures shown per second is more than sixteen, the eye is able to integrate(mix) the changing levels of brightness in the scene. This is called as **Image Continuity.**	**1M Each Definition.**
	c)	**Explain NHK MUSE encoding system.**	**4M**
	Ans:	• MUSE stands for Multiple Sub-Nyquist Sampling Encoding and is an HDTV bandwidth compression scheme developed by NHK. • It uses fundamental concepts for performance exchange in the spatio – temporal (transitory transformation) domain along with motion compensation to reduce the transmission bandwidth down to near about 10 MHz. • The processed HDTV signal can be then transmitted using a single BDS channel. Temporal Interpolation In MUSE the luminance and colour information are sent by time multiplexed components (TMC) The colour information is sent sequentially with a time compression of four. • For a moving picture area the final picture is reconstructed by spatial interpolation using samples from a single field. Hence moving portions of the picture are reproduced with one- quarter the spatial resolution of the stationary areas. The spatial frequency response for both stationary and moving areas of the picture is shown in figure below. • In decoder, the read – out addresses of picture elements (pixels) from previous fields are shifted according to the information provided by the motion vector so that the data can be processed in still – picture mode.	**Diagram : 2M** **Explanation : 2M**

		• These two modes of interpolation, the inter – frame processing for stationary pictures and infra field averaging for moving portions of the picture are switched by detecting the moving areas at the decoder. • Audio transmission is done by 4 – phase DPSK which is multiplexed with the processed video signal in the vertical blanking interval after frequency modulation of the transmission carrier by the video signal. 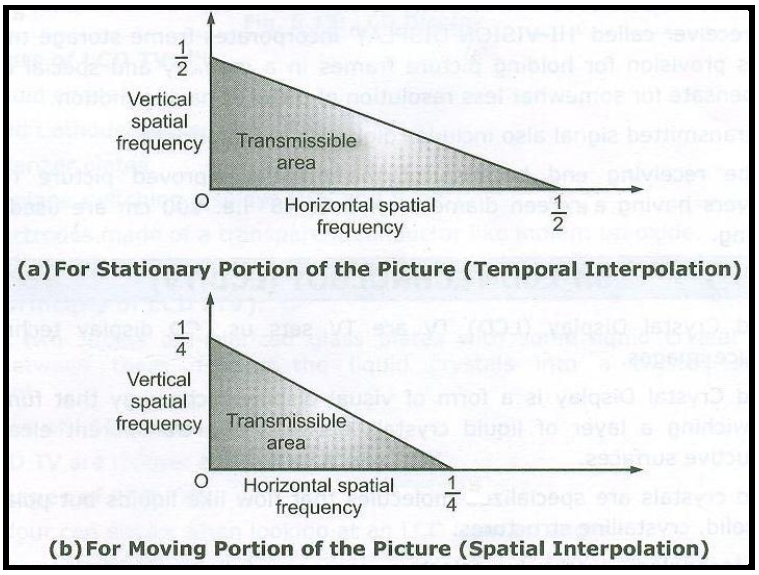 • Figure: Interpolation	
	d)	**Explain the block diagram of OLED.**	**4M**
	Ans:	**Note: Any other equivalent diagram can be considered.** **Working of an OLED** • After the organic material has been applied to the substrate the real working of the OLED begins. • The substrate is used to support the OLED. The anode is used to inject more holes when there is a path of current. The conducting layer is used to carry the holes from the anode. The cathode is used to produce electrons when current flows through its path. The emissive layer is the section where the light is produced. This layer is used to carry the electrons form the cathode. • First, the anode is kept positive w.r.t the cathode. Thus there occurs an electron flow from the cathode to the anode. This electron flow is captured by the emissive layer causing the anode to withdraw electrons from the conductive layer. Thus, there occurs a flow of holes in the conductive layer. As the process continues, the	**2M Diagram 2M Explanation.**

conductive layer becomes positively charged and the emissive layer becomes negatively charged.

- A combination of the holes and electrons occur due to electrostatic forces. As the electrons are less mobile than the holes, the combination normally occurs very close to the emissive layer. This process produces light in the emissive region after there has been a drop in the energy levels of the electrons. The emissive layer got its name as the light produced in the emissive region has a frequency in the visible region. The colour of the light produced can be varied according to the type of organic molecule used for its process. To obtain colour displays, a number of organic layers are used. Another factor of the light produced is its intensity. If more current is applied to the OLED, the brighter the light appears. Take a look at the diagram given below.

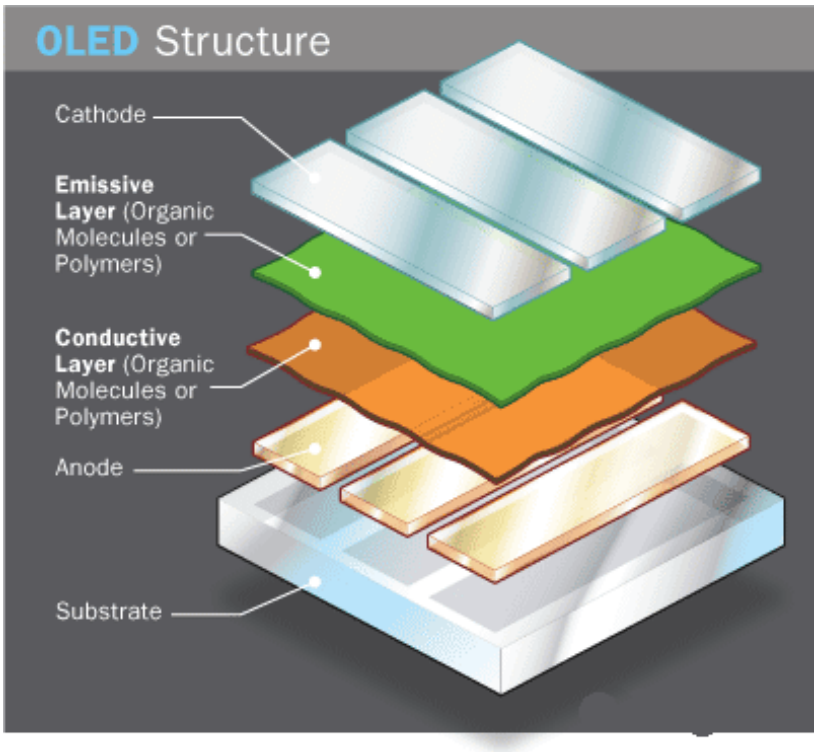

OLED Diagram

- Now consider the process when the anode is negative w.r.t the cathode. This will not make the device work as there will not be any combination of the holes and electrons. The holes will move towards the anode and the electrons to the cathode.

Q. No.	Sub Q. N.	Answers	Marking Scheme
4		**Attempt any THREE of the following :**	**12- Total Marks**
	(a)	**"Digital camcorders are best for video recording than digital camera". Justify.**	**4M**
	Ans:	• A camera section, consisting of a CCD, lens and motors to handle the zoom, focus and aperture • A VCR section, in which a typical TV VCR is shrunk down to fit in a much smaller space. • The camera component's function is to receive visual information and interpret it as an electronic video signal. The VCR component is exactly like the VCR connected to your television: It receives an electronic video signal and records it on video tape as magnetic patterns • The digital camera has good shutter speed and which is suitable for capturing still images or portrait images.	**4M**
	(b)	**Differentiate between LCD and LED TV.**	**4M**
	Ans:		**1M Each poin (Any 4 Points)**

Parameter	LED	LCD
Full Form	light emitting diodes	liquid crystal display
Backlight	light emitting diodes	fluorescent lights
Backlight position	either behind the screen or around its edges	behind the screen
Size	Thinner then LCD	Thicker then
Efficiency	More Compare to LCD	Less Compare to LED

	(c)	**Explain the troubleshooting procedure for colour TV receiver system.**	**4M**
	Ans:	• Check the Antenna signal strength, whether it gives readings as per requirement. • As per the behavior of the screen or the speaker, check the different sections of TV	**4M Proced**

		receiver. • For Sound Related Issue, Check sound section, Sound IF section • For Video Related Issues, Check video & Chroma Section, Sync Section. • For Completely Dead TV, Check Power supply section, Horizontal Output Section. • If problem found, Replace/ Repair the Component and start the TV.	**ure.**
	(d)	**Give CCIR-B standards for colour signal transmission and reception.**	**4M**
	Ans:	(Any 4 transmission and 4 reception standards)	**2M for CCIR B Transmission standards** **2M for CCIR B reception standards**

Reception	
Camera output	R, G, and B video signals
Luminance signals	Y=0.30R+0.59G +0.11B
Colour difference signals chosen for transmission	(B-Y) and(R-Y)
Type of colour signal modulation	Suppressed carrier amplitude modulation Of two subcarriers in quadrature having same numerical value.
Colour difference signals	U=0.493(B-Y) V=0.877(R-Y)
Composite colour signal	Y+U sin ωm t+-Vcos ωmt
Amplitude of modulated Chroma signal	u2+v2
Colour subcarrier frequency	4.433185 MHz
Duration of burst	10+1
Chroma encoding	Phase and amplitude modulation
Bandwidth for colour signals (u and v)	Fsc-1.3 MHz to fsc+0.6 MHz

Transmission	
No. of lines per picture (frame)	625
Field frequency (Fields/second)	50
Interlace ratio, i.e., No. of fields/picture	2/1
Picture (frame) frequency, i.e., Pictures/second	25
Line frequency and tolerance in lines/second,(when operated non-synchronously)	15625 ± 0.1%
Aspect Ratio (width/height)	4/3
Scanning sequence	(i) Line: Left to right (ii) Field: Top to bottom
System capable of operating independently of power supply frequency	YES
Approximate gamma of picture signal	0.5
Nominal video bandwidth, i.e., highest video modulating frequency (MHz)	5
Nominal Radio frequency bandwidth, i.e., channel bandwidth (MHz)	7
Sound carrier relative to vision carrier (MHz)	+5.5
Sound carrier relative to nearest edge of channel (MHz)	– 0.25

Nearest edge of channel relative to picture carrier (MHz)	–1.25		
Fully radiated sideband	Upper		
Nominal width of main sideband (upper) (MHz)	5		
Width of end-slope of full (Main) sideband (MHz)	0.5		
Nominal width of vestigial sideband	0.75 MHz		
Vestigial (attenuated) sideband	Lower		
Peak white level as a percentage of peak carrier	10 to 12.5		
Type of sound modulation	FM, ± 50 KHz		
Pre-emphasis	50 μs		
Resolution	400 max		
(e)	**Explain the troubleshooting procedure of colour TV transmitter.**	**4M**	
Ans:	Note: (Any otherequivalent procedure can be considered) • Check the Antenna signal strength, whether it gives readings as per requirement. • Check the Diplexer stage • Check the Video Section properly for video signal generation. Which includes, Mixer, Adder, Gating Pulses, Sync Signal Generator etc. • Check the Sound Signal section. Which includes, Microphone, Modulator, Amplifier circuit. • If the reading are not match with the standard readings, there could have an problem in component. • Replace/ repair the component and check the signal again.	**4M Procedure**	

Q. No.	Sub Q. N.	Answers	Marking Scheme
5.		**Attempt any TWO of the following:**	**12- Total Marks**
	a)	**Draw and explain the block diagram of colour TV transmitter.**	**6M**
	Ans:	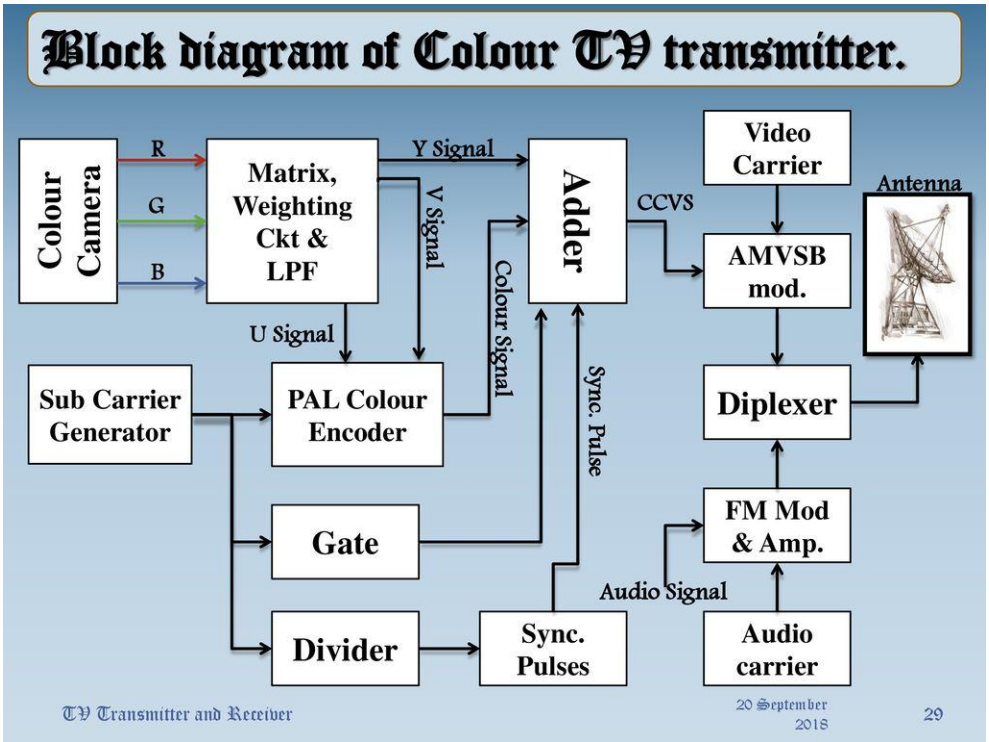 A PAL colour TV transmitter consists of following three main sections. 1. Production of Luminance (Y) and Chrominance (U and V) signals 2. PAL encoder 3. Video and Audio modulators and transmitting antenna ***<u>Production of Luminance (Y) and Chrominance (U and V) signals:</u>***	**BlockDiagram: 3 Marks, Explanation: 3 Marks**

		• Colour camera tube produces R, G and B voltages pertaining to the intensity of red, green and blue colours respectively in pixels. The luminance signal Y is obtained by a resistive matrix, using grassman's law. **Y=0.3R+0.59G+0.11B.** • For colour section Y is inverted colours R&B obtained from the colour camera tubes are added to it to get (R-Y) and (B-Y) colour difference signal. These signals are weighted by two resistive matrix network which gives U & V signals as **U=0.493 (B-Y) & V=0.877(R-Y)** ***PAL encoder:*** • PAL switch which operates electronically at 7812.5Hz with the help of bistable multivibrator and feeds the sub-carrier to balanced modulator with phase difference of +90 degree on one line and -90 degree on the next line. • The PAL encoder consists of a **subcarrier generator and two balanced modulator with filters to produce modulated subcarrier signal**. These signals are added vertically to give Chroma signal (C). Then Chroma signal is mixed with Y signal along with sync. And blanking pulses to produce Colour Composite Video Signal (CCVS). ***Video and Audio modulators and transmitting antenna:*** • CCVS amplitude modulates the main video carrier. It is followed by a sharp VSB filter to attenuate the LSB to give AMVSB signal for transmitter. Audio signal modulates separate carrier. This modulation is FM type. • AMVSB video signal along with audio signal passes to the transmitting antenna through Diplexer Bridge which is a wheatstone's bridge.	
	b)	**(i) Explain the working of MP3 player.** **(ii) Give troubleshooting procedure for audio systems.**	**6M**
	Ans:	**(i) Block diagram of MP3 Player**	**(i) Block diagram: 1.5 Marks, Explanation: 1.5**

		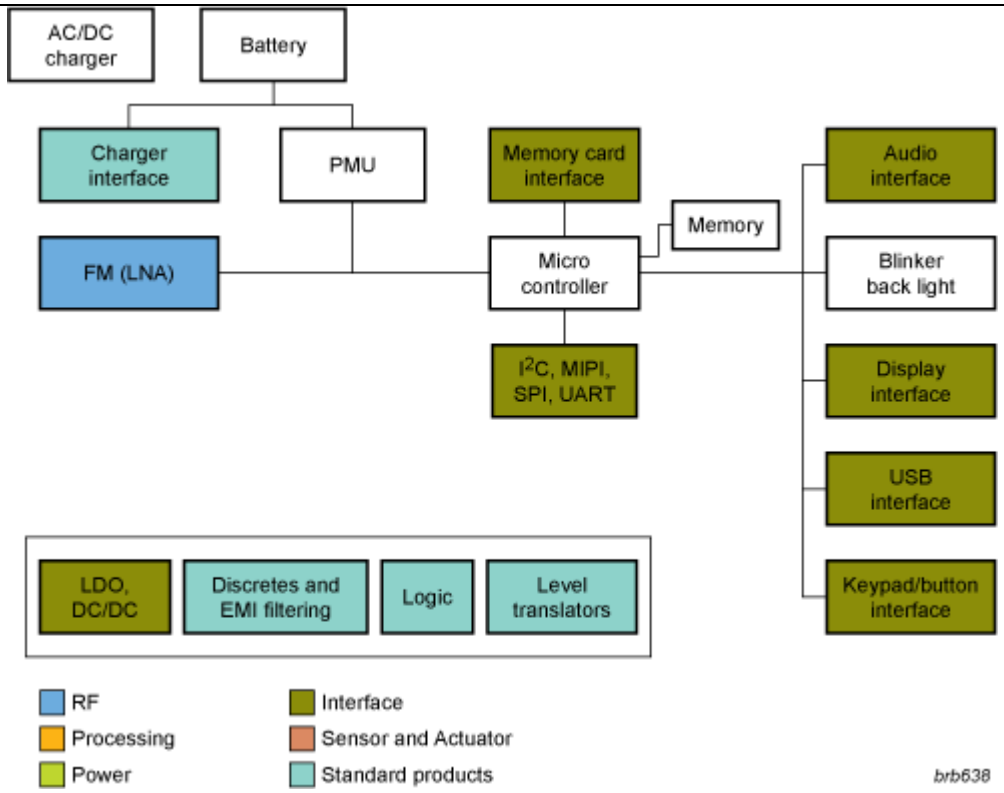 **Explanation:** • **Audio** Our digital audio amplifier family is built to simplify audio architecture by lowering the system cost and enabling easy interfacing. Using a digital interface eliminates the need for a D/A converter in the host processor, and the PDM or I2S format guarantees an ultra small IC footprint. The digital interface assures low RF susceptibility in the device and the total system, and low sensitivity to input clock jitter. In addition, the digital interface eliminates the need for couple capacitors and safeguard speakers by eliminating problems coming from DC offsets due to leakage currents of an analog design. **(ii)Charger interface** Whether your device is charged via the USB port or a separate charger, it is exposed to incorrect polarity or abnormally high voltages. Any of these two occurrences poses a threat to the charger circuit and the PMU of the mobile device. In addition, the USB/charger port can be subject to ESD strikes and other transient discharges. NXP offers an application specific portfolio of TVS diodes and ESD arrays, which	**Marks(brief explanation is expected)** **(ii) Troubleshooting procedure: 3 Marks**

		enable cost efficient protection solutions - ESD, reverse polarity, overvoltage, other transient discharges – with the smallest footprint. **(iii)Memory Card Interfaces** According the IEC61000-4-2 standard, SD host interfaces require additional high-level ESD protection, in addition to the integrated ESD protection which is typically very weak. They also support EMI filtering, integrated biasing resistor networks, regulated power supply to supply SD-memory cards directly from a battery, and voltage level translation to enable the use of low-voltage host processors to communicate with 2.7 V to 3.6 V compliant SD-memory card devices **(ii) Give troubleshooting procedure for audio systems.** • Shut down and restart the system. Surprisingly often, this solves the problem. • Verify that all cables are connected, that the speakers have power and are switched on, that the volume control is set to an audible level, that you haven't muted audio in Windows, and so on. • Determine the scope of the problem. If the problem occurs with only one program, visit the web sites for Microsoft, the software company, and the audio adapter maker to determine if there is a known problem with that program and audio adapter combination. If the problem occurs globally, continue with the following steps. • Verify that the audio adapter is selected as the default playback device. If you have more than one audio adapter installed, verify that the default playback device is the audio adapter to which the speakers are connected. • If your audio adapter includes a testing utility, run it to verify that all components of the audio adapter are operating properly. • If you have another set of speakers and /or a spare audio cable, substitute them temporarily to eliminate the speakers as a possible cause. If you have a set of headphones, connect them directly to Line-out on the audio adapter to isolate	

		the problem to the system itself. Alternatively, connect the questionable speakers to another system with a known good audio adapter, or even an MP3 player or portable CD player.	
	c)	**(i) Explain the working principle of Electrostatic and permanent magnet speaker.** **(ii) Compare Woofer and Tweeter.(Any four points)**	**6M**
	Ans:	**(i) Electrostatic speaker.** 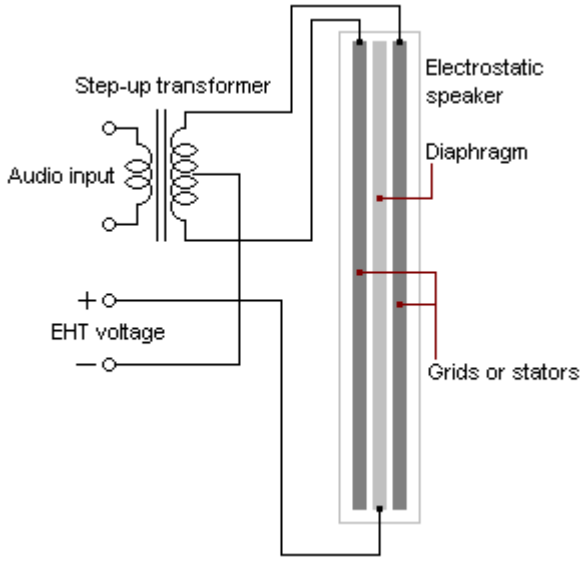 The voltage is applied to the central or movable plate, the signal voltage is applied to the two outside plates causes these plates to attract or repel each other. The amount of attraction or repulsion depends on the applied voltage. If one of the plates is flexible metal, it will bend. But the amount of attraction and repulsion is not directly proportional to the applied voltage.	**Electrostatic: 1.5 Marks, permanent magnet speaker : 1.5 Marks**

Permanent magnet speaker.

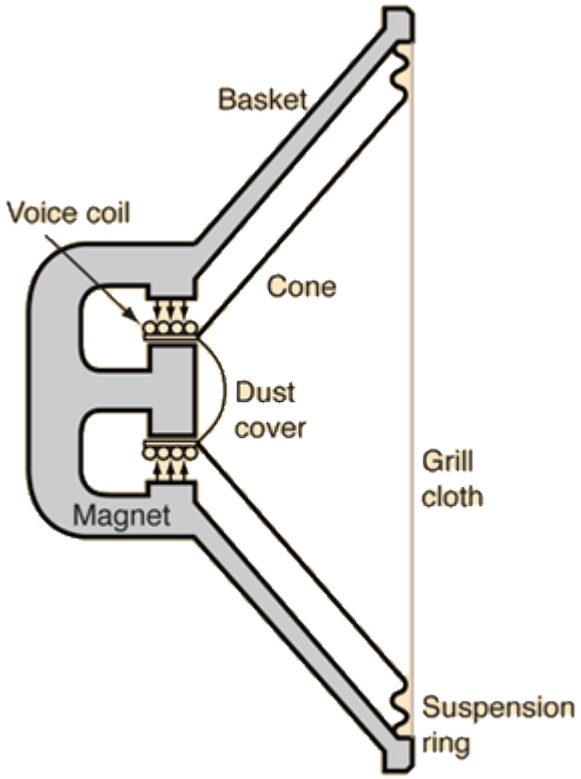

A light voice coil is mounted so that it can move freely inside the magnetic field of a strong permanent magnet. The speaker cone is attached to the voice coil and attached with a flexible mounting to the outer ring of the speaker support. Because there is a definite "home" or equilibrium position for the speaker cone and there is elasticity of the mounting structure, there is inevitably a free cone resonant frequency like that of a mass on a spring.

The frequency can be determined by adjusting the mass and stiffness of the cone and voice coil, and it can be damped and broadened by the nature of the construction, but that natural mechanical frequency of vibration is always there and enhances the frequencies in the frequency range near resonance. Part of the role of a good enclosure is to minimize the impact of this resonant frequency.

(ii) Compare Woofer and Tweeter.(Any four points)

Sr. No	Parameter	Woofer	Tweeter
1	Defination	Produce low frequency audio sound	Produce High frequency audio sound
2	Size	Large	Small
3	Weight	Heavy	Light
4	Frequency Range	16 Hz to 1 KHZ	5Khz to 20 KHz

3 Marks: 1 Mark for each point

Q. No.	Sub Q. N.	Answers	Marking Scheme
6.		**Attempt any TWO of the following :**	**12- Total Marks**
	a)	**Draw and explain the block diagram of washing machine. State advantages of automatic washing machine.**	**6M(** **Block diagram:2 Marks,** **Explanation: 2 Marks,** **Advantages: 2 marks**

WINTER-19 EXAMINATION

Subject Name: Consumer Electronics **Subject Code:** 22425

Model Answer

25

	Ans:	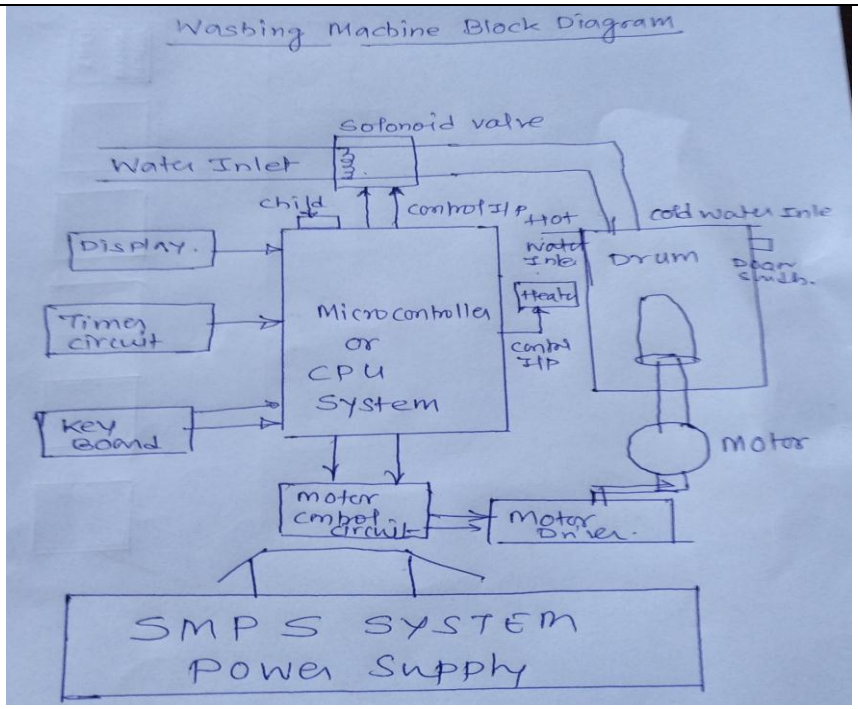 OR	

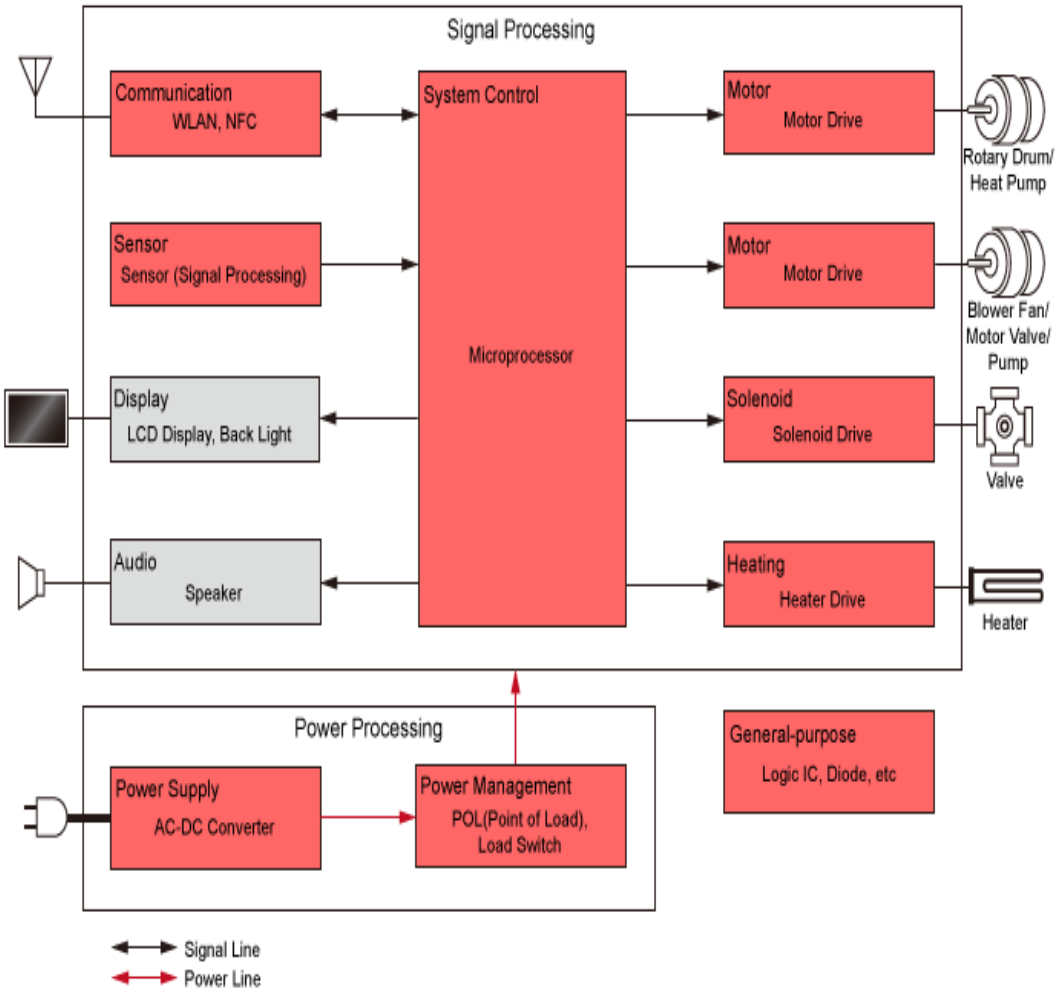

Explanation:

The washing machines use inverter control for both washing and spin-drying. Inverter control helps reduce wash/spin noise and vibration and enables a washing machine to adjust the amount of water and motor torque to suit the washload. IGBTs are used for motor drive, and microcontrollers for overall control.

Additionally, an intelligent power device (IPD) is used to drive a water circulating pump of a spin dryer. Power factor correction (PFC) ICs or IGBTs are used in the power supply circuit to keep harmonics in the input current below the IEC limit.

		Advantages: 1. Time Saving 2. Effective 3. Consume less power 4. Save water	
	b)	**Explain the working of Direct to Home Receiver (DTH) with its indoor and outdoor unit.**	**6M**
	Ans:	**Block diagram:** 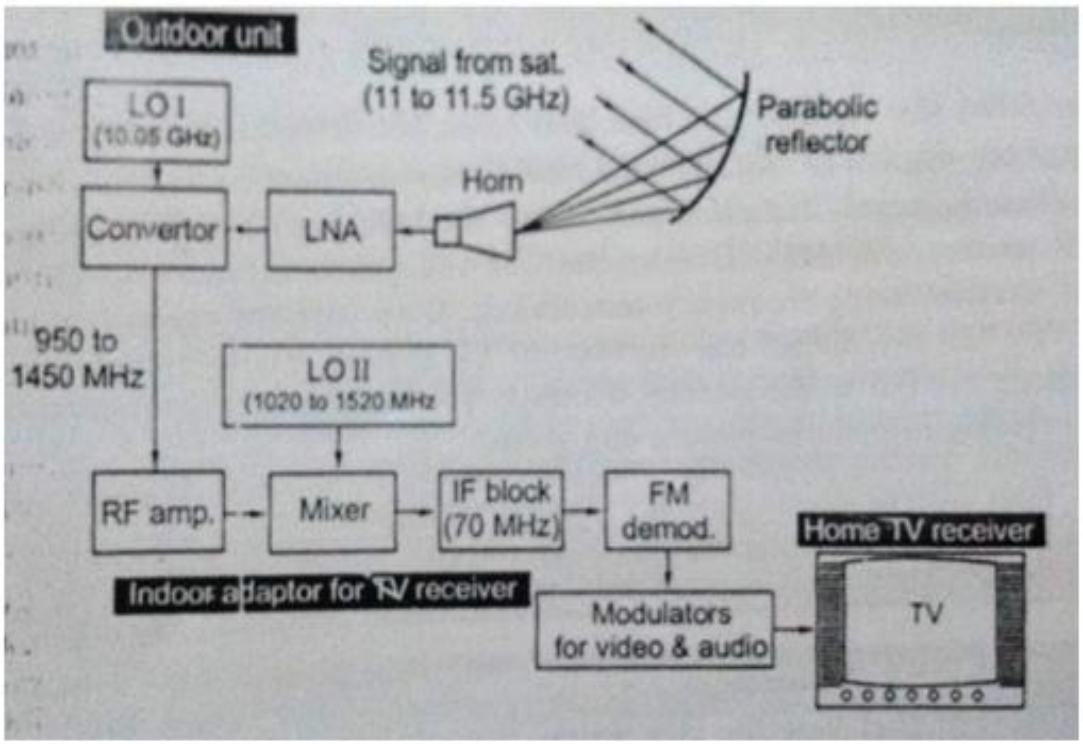 **Outdoor unit:** • It consists of a receiving antenna, low noise amplifier & converter the receiving antenna is parabolic reflector with a horn as the active element. The horn can be directly in front of reflector, or it may use an offset feed as shown in fig. The reflector diameter may be 0.6m	**Block diagram: 3 Marks,** **Explanation: 3 marks**

		for 11GHz & still smaller for K &Ka bands. • The low noise block consists of a low noise wide band amplifier followed by a convertor. The output of convertor consists of a signal of UHF frequency ranging from 950-1450MHz. • The advantage of using UHF frequency is that a low cost coaxial cable can be used as feeder from the outdoor unit to the indoor unit. • LNB cannot be kept indoor because long cable between horn & the first amplifier will cause substantial degradation of the overall noise figure of the set. **Indoor unit:** • The wideband signal from the LNB is fed to an RF amplifier. The amplified signal is fed to a channel selector circuit which selects the wanted band. • The selected channel is down converted to a fixed IF of 70MHz by local oscillator & mixer. IF amplifier amplifies the signal which then goes to FM detector. • The detector recovers original baseband signal, consisting of CVS & audio signal. These modulated signals are fed to the normal domestic TV receiver, which after due processing reproduces picture & sound.	
	c)	**Explain the working of microwave oven and give its four electrical specifications.**	**6M**
	Ans:		**Working: 4 Marks,** **Specification: 2 marks**

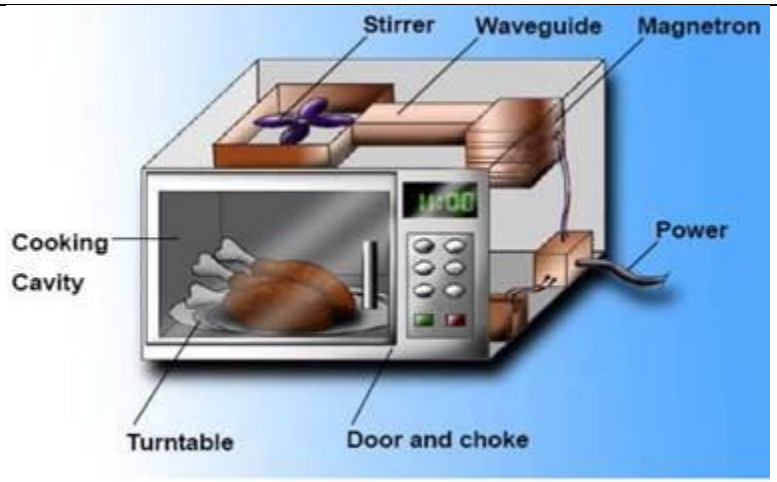

Working of Microwave oven

I. Microwave is used to cook the food. In it, microwaves, are passed through the molecules of the food.

ii. These microwaves are produced by a device called a magnetron within the microwave oven.

iii. All food items contain water. The frequency of microwaves, causes the water molecules to vibrate, as a result, this movement generates heat.

iv. When the temperature rises, the molecules of water travel or vibrate or rotate with higher energies. The frequency of rotation of water molecules is about 3 gigahertz (300 crore hertz).

v. If water receives microwaves of this frequency, its molecules absorb this radiation and water gets heated up. In this way the food gets heated up in a microwave oven.

Electrical specifications.

- Supply voltage: 220 volts,50 Hz. Single phase A.C.
- Power consumption: 1300 W approx.(power consumption vary as manufacturer
- from500W to 1500W)
- Microwave power: 700 w-850 W
- Microwave frequency: 2450 Mhz (1000Mhz to 3000Mhz)
- Timer: 60 min. – 90 min(timer can also varied)
- Control: Soft/one touch control