WINTER– 18 EXAMINATION

Subject Name: Advance Automobile Engineering (AAE) **Model Answer** Subject 17523

Important Instructions to examiners:

1) The answers should be examined by key words and not as word-to-word as given in the model answer scheme.
2) The model answer and the answer written by candidate may vary but the examiner may try to assess the understanding level of the candidate.
3) The language errors such as grammatical, spelling errors should not be given more Importance (Not applicable for subject English and Communication Skills.
4) While assessing figures, examiner may give credit for principal components indicated in the figure. The figures drawn by candidate and model answer may vary. The examiner may give credit for any equivalent figure drawn.
5) Credits may be given step wise for numerical problems. In some cases, the assumed constant values may vary and there may be some difference in the candidate's answers and model answer.
6) In case of some questions credit may be given by judgement on part of examiner of relevant answer based on candidate's understanding.
7) For programming language papers, credit may be given to any other program based on equivalent concept.

Q. No.	Sub Q. N.	Answer	Marking Scheme
1	**A)**	**Attempt any THREE:**	12
	a)	**Draw neat sketch of any two types of SI engine combustion Chamber.**	04
		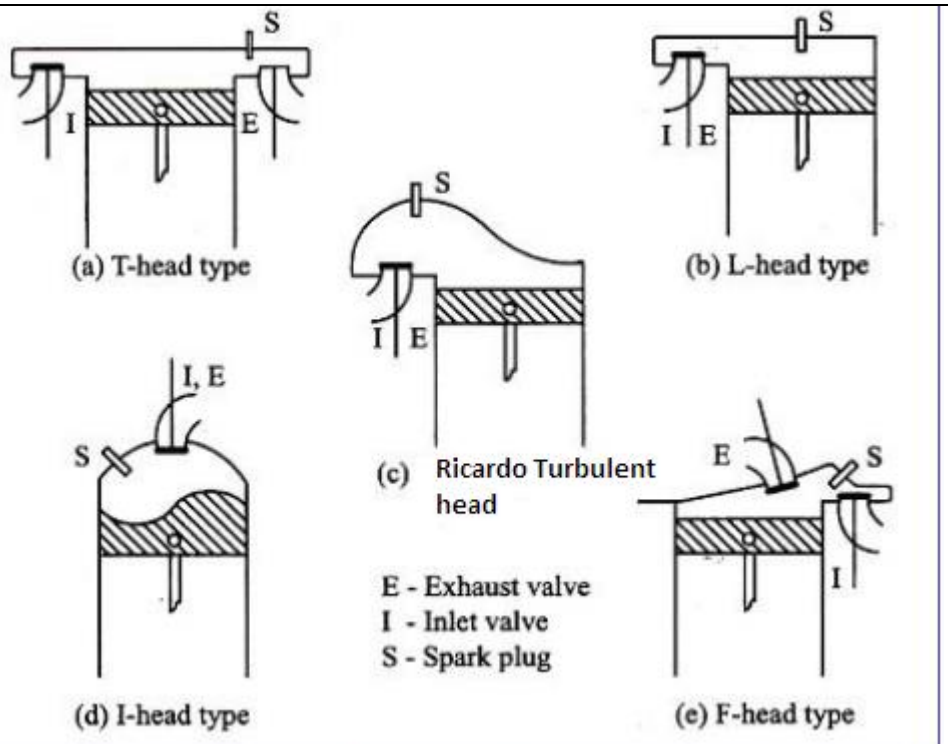	2 marks each (Any two)

	b)	**State FOUR advantages if MPFI engine.**	04
		Answer:-Advantages if MPFI engine. (Any 4) 1) MPFI improved fuel consumption. 2) Better Drivability. 3) ECM technique is used to control the engine. 4) Precise supply of air-fuel mixture 5) Engine response is good in the throttle applied condition also. 6) The MPFI engines vibrate less and don't require to be cranked twice or thrice in cold weather. 7) MPFI helps in uniform combustion of fuel inside the combustion chamber. 8) Each cylinder is supplied with the precise and uniform quantity of the air-fuel mixture. 9) Cleaner emissions 10) MPFI improves functionality and durability of the engine components.	One marks each
	c)	**Enlist any FOUR major features of CRDI system.**	04
		1. CRDI engine has lower emission. So, it meets latest emission norms. Finely atomized fuel results in an efficient air-fuel mixing & reduced particulate emissions. 2. It gives improved fuel economy. 3. CRDI engine has lower engine noise level. CRDI engines have capability to deliver stable, small pilot injections can be used for decreased NOx emissions and noise. 4. All the cylinders have balanced engine cylinder pressures. (i.e. reduced torsional vibrations). 5. Separation of pressure generation and injection allowing flexibility in controlling both the injection rates and timing of CRDI. 6. In CRDI system, Common rail pressure does not depend on the engine speed and load conditions. 7. In CRDI, High injection pressures (about 1500 bar) and good spray preparations are possible even at low engine speeds and loads. 8. In CRDI system, Fuel pump operates with low drive torque. 9. High pressure accumulator (common rail) provides consistently high pressure fuel to injectors. 10. Use of high pressure pump which allows the fuel to be supply at higher pressure under all operating condition.	One mark each (Any 4)
	d)	**Write the properties of diesel as a fuel in CI engine.**	04
		1) Volatility: - The fuel should be sufficiently volatile in the operating range of temperature to produce good mixing and combustion. 2) Viscosity: Viscosity of a fuel is a measure of its resistance to flow. 3) Flash point: Flash point is the temperature at which a flammable liquid will produce, with a standardized apparatus and procedure, a mixture of its vapour and air which will ignite to give a visible flash by contact with an open flame. 4) Fire point: Fire point is the temperature at which the flash will sustain itself as a steady flame for at least five seconds. 5) Cetane number: The Cetane rating of a diesel fuel is measure of its ability to auto-ignite quickly when it is injected into the compressed and heated air in the engine. 6) Calorific value: It is about 50 MJ/Kg 7) Sulphur content: High sulphur content in diesel fuel causes corrosion, wear of engine parts, especially the cylinder walls, and tends to increase the rate of sticky and sludge - like deposits. 8) Contamination: The contents of sand and rust particles can clog small openings and abrasive particles can damage injector surface piston rings and cylinder walls. 9) Cloud point: The temperature below which the wax content of the petroleum oil separates out in the form of a solid is called cloud point. Such waxy solid can clog fuel lines and fuel filters. 10. Pour point: pour point is the temperature below which the entire mass of fuel, solid or liquid	01 marks Each for four properties of diesel

		together, freeze and thus cause flow of fuel impossible. Pour point is usually 5 to 10°c below the cloud point. 11. Specific Heat: It is the amount of heat required to raise the temperature of unit mass of a diesel through 1°c. It is about 1.9 KJ/Kg°c.	
01	B)	Attempt any One:	06
	a)	**Discuss the drawbacks of carbureted SI engine on the base of, Air-fuel ratio, fuel consumption, power output, emission.**	06
		1) Air-fuel ratio: - As in SI engine Air-fuel ratio varies from 8:1 to 18.5:1 i.e. from 8 kg of air/kg of fuel to 18.5 kg of air/kg of fuel. Richer or leaner air-fuel ratio limit causes the engine to misfire, or simply refuse to run at all. 2) Fuel consumption:- as atomisation rate deepened upon velocity of air in venture also As in SI engine Air-fuel ratio varies from 8:1 to 18.5:1 so Fuel consumption is more in SI engine. 3) Power output: - power output varies due to variation of Air-fuel ratio. 4) Emission: As in SI engine Air-fuel ratio varies from 8:1 to 18.5:1 i.e. from 8 kg of air/kg of fuel to 18.5 kg of air/kg of fuel. So emission is more in SI engine. * (any suitable answer can be considered)	6 marks
	b)	**Draw a layout of fuel injection system in CRDI diesel engine. State its fundamental requirement.**	06
		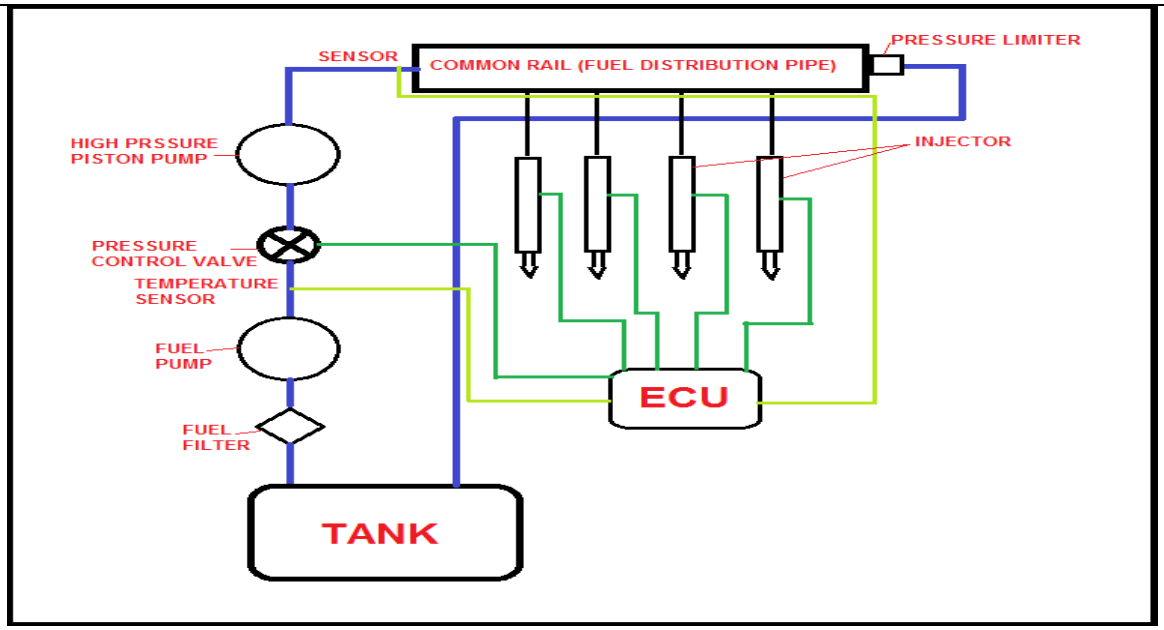 Fundamental requirement:-The line diagram of CRDI shows that the system is controlled by ECU. The sensors in the system are used to feed the input in the ECU.ECU will provide the signal to the injectors on the basis of engine factors like engine load, engine speed, temperature etc. The various components of engine will be controlled by sensors. The required quantity of fuel in required time will be calculated by it. <u>Major Components includes</u>- fuel injector, common rail, High pressure fuel pump, ECM/ECU, Pressure sensor, Rail pressure limiter. * (any suitable answer can be considered)	3 marks layout 3 marks

02		Attempt any Four:	16
	a)	**Explain the various stages of combustion in SI engines.**	04
		The stages of combustion in SI engines Stage I:-Ignition Lag or Preparation Phase. Stage II: - Propagation of flame. Stage III: - After burning. 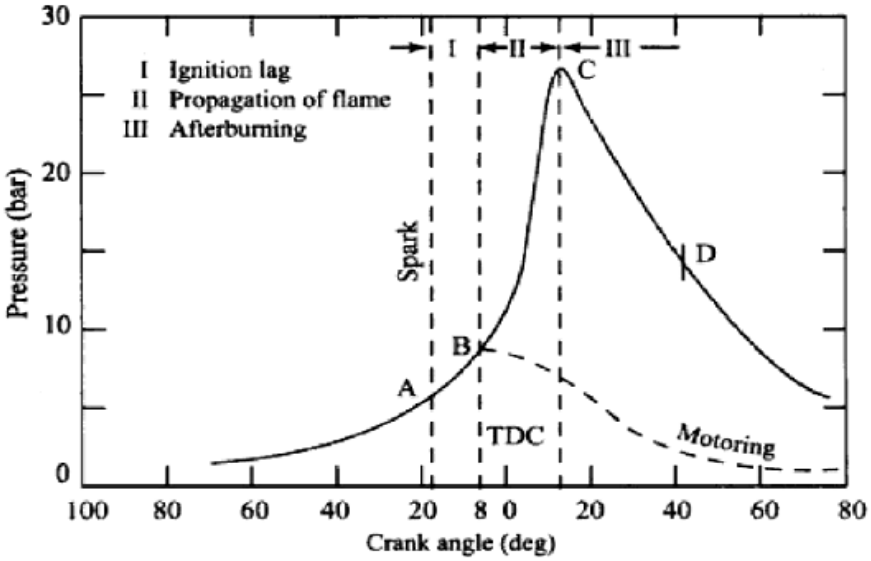 **1**. ***Ignition lag stage***: There is a certain time interval between instant of spark and instant where there is a noticeable rise in pressure due to combustion. This time lag is called IGNITION LAG. Ignition lag is the time interval in the process of chemical reaction during which molecules get heated up to self ignition temperature , get ignited and produce a self propagating nucleus of flame. The ignition lag is generally expressed in terms of crank angle (θ_1). The period of ignition lag is shown by path (a-b). Ignition lag is very small and lies between 0.00015 to 0.0002 seconds. An ignition lag of 0.002 seconds corresponds to 35 deg crank rotation when the engine is running at 3000 RPM. Angle of advance increase with the speed. This is a chemical process depending upon the nature of fuel, temperature and pressure, proportions of exhaust gas and rate of oxidation or burning.	2 marks Diagram 2 marks

		2. *Flame propagation stage*: Once the flame is formed at "b", it should be self sustained and must be able to propagate through the mixture. This is possible when the rate of heat generation by burning is greater than heat lost by flame to surrounding. After the point "b", the flame propagation is abnormally low at the beginning as heat lost is more than heat generated. Therefore pressure rise is also slow as mass of mixture burned is small. Therefore, it is necessary to provide angle of advance (30-35) degrees, if the peak pressure to be attained (5-10) degrees after TDC. The time required for crank to rotate through an angle (θ_2) is known as combustion period during which propagation of flame takes place. **3. *After burning*:** Combustion will not stop at point "c" but continue after attaining peak pressure and this combustion is known as after burning. This generally happens when the rich mixture is supplied to engine.	
	b)	**Explain the construction and working of throttle body injection (TBI) system.**	04
		The throttle body injection (TBI) system uses one or two injector valves mounted in a throttle body assembly. The injectors spray fuel into the top of the throttle body air horn The TBI fuel spray mixes with the air flowing through the air horn. The mixture is then pulled into the engine by intake manifold vacuum. The throttle body injection assembly typically consists of the following: throttle body housing, fuel injectors, fuel pressure regulator, throttle positioner, throttle position sensor, and throttle plates. Throttle Body Injection is an electronically controlled injection system in which an electronic fuel injector injects the fuel intermittently in to the intake manifold at a central point ahead of the throttle valve. The central- injection unit operates at low pressure (0.7 to 1 bar) so; an inexpensive hydrodynamic electric fuel pump can be used (generally in the form an in-tank unit). The injector is flushed continuously by the fuel flowing through it in order to prevent the formation of air bubbles. The injector is a solenoid – controlled valve. The central injection unit uses the throttle valve to meter the intake air while injecting the fuel intermittently above the throttle valve. The intake manifold then distributes the fuel to the individual cylinders. Various sensors monitor all important engine-operating data, which are then used to calculate the triggering signals for the injectors and other system actuators.	2 marks

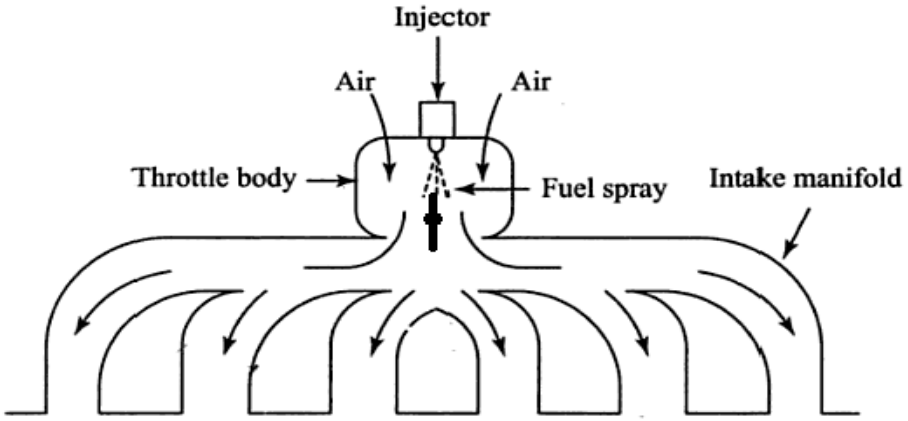

Fig. Throttle body injection (Single point)

2 marks

c) Enlist the measures of control detonation in SI engine. 04

Detonation can be control by any or all of the following techniques:

1) Use of a fuel with high octane rating.
2) Enriching the air–fuel ratio.
3) Reducing peak cylinder pressure.
4) decreasing the manifold pressure by reducing the throttle opening or boost pressure
5) reducing the load on the engine
6) Retarding (reduce) ignition timing.
7) Increasing engine rpm.
8) Retarding spark.
9) Water injection
10) Use of high octane fuel can eliminate detonation.

4 marks

d) Define delay period in CI engine. Explain factors affecting delay period 04

The period between the start of fuel injection into the combustion chamber and the start of combustion is termed as delay period in CI engine. 01 marks

factors affecting delay period:- 03 marks

Sr. No	Parameter	Effect on the Delay Period in C.I. Engine
i	Ignition quality of fuel	A lower self ignition temperature means a lower delay period.
ii	Injection timing	Delay period increases with increase in injection advance angle.
iii	Compression ratio	Increased Compression Ratio reduces delay period and vice versa.
iv	Engine speed	As engine speed increases, delay period decreases.
v	Air fuel ratio	As air: fuel ratio decreases, delay period decreases.
vi	Load	Delay period increases with load.
vii	Engine size	Large engines operate at low speed thus increasing delay period in terms of crank angle
viii	Type of combustion chamber	A pre-combustion chamber gives a shorter delay period as compared to an open type of combustion chamber.

	e)	**Compare SI and CI engine on the basis of air-fuel ratio, power output, emission and knocking.**	04

Parameter	SI engine	CI engine
Air-fuel ratio	air-fuel ratio is 14.7:1	air-fuel ratio is 20:1 to 70:1
Power output	Power output is Less than CI engine due to lower compression ratio.	Power output is more than SI engine due to higher compression ratio.
Emission	Emission is more.	Emission is less.
Knocking	Knocking take place at the end of combustion.	Knocking take place at beginning or start of the combustion.

01 marks

Each point.

	f)	**Explain the effect of spark advance and retardation on knocking.**	04

Advanced spark: - Quantity of fuel burnt per cycle before and after TDC position depends on spark timing. The temperature of charge increases by increasing the spark advance and it increases with rate of burning and does not allow sufficient time to the end mixture to dissipate the heat and increase the knocking tendency.

Spark Retardation:-Retarded spark helps to decrease the engine knock because comparatively lower maximum engine pressures are produced. The maximum pressure occurs late in the cycle during the power stroke and is not as high as that of the normal case. So the power output is lesser due to spark retardation. The engine runs hot due to late burning and causes damage to exhaust valves and ports. Spark retardation causes exhaust gas temperatures to be higher thereby promoting additional burning of hydrocarbons in the exhaust manifold. Fuel economy is adversely affected. Spark retardation causes lesser emissions at idling operation of engine. The normal curve indicates smooth engine running when the maximum pressure is built up when piston reaches TDC.

02 mark each.

3		**Attempt any FOUR of the following.**	**16**
	a)	**Enlist any three methods of fuel injection. Discuss any one in detail.**	04
	Ans:	**Answer:** *(Listing any 3 Methods : 1 marks, Description 1 Mark & sketch 2 Marks)*	

Methods of petrol injection

1. Sequential fuel injection. (SFI)
2. Grouped fuel injection.
3. Simultaneous fuel injection
4. Continuous injection.

Sequential Injection:
Each injector is controlled separately.
Injection timing, both with reference to crank/camshaft position and pulse width, can be optimized for each individual cylinder.

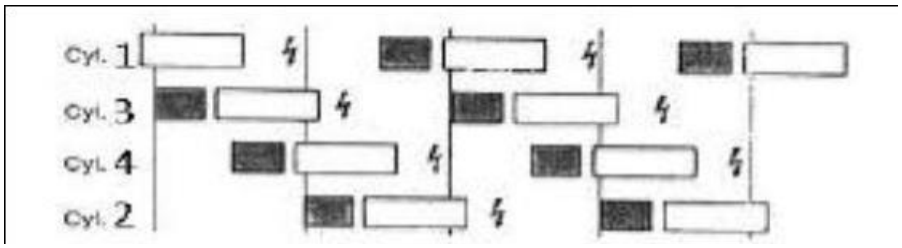

b) Compare the carbureted engine fuel supply system with MPFI system 04

Ans:

Answer: *(four points- 1 mark each)*

Sr. No.	Carbureted fuel supply system	MPFI fuel supply system
1	Mal-distribution of charge.	Uniform distribution of charge.
2	Due to resistance in intake manifold volumetric efficiency is lower.	Improvement in volumetric efficiency due to less resistance in the intake manifold.
3	Inaccurate metering of charge.	Accurate metering of charge.
4	Carburetor Icing may take place.	Formation of ice on the throttle plate is eliminated.
5	Fuel atomization depends upon velocity of air in the venture.	Atomization of fuel is independent of cranking speed therefore cranking is easier
6	Less atomization and vaporization will make the engine more knock prone.	Better atomization and vaporization will make the engine less knock prone.
7	Fuel need to be more volatile	Less volatile fuel can be used.
8	Fuel injection is take place inside the manifold.	fuel being injected into or close to the cylinder.

c) What is ECM? Explain how fuel injection is controlled using ECM. 04

Answer: - *(ECM- 2 Mark & Fuel injection control-2 Mark)*

ECM-The ECM is Electronic control module. It evaluates the sensor inputs using data tables and calculations to determine the output of the actuating devices. The ECM processes signals from the various sensors like Temperature, intake air flow, lambda (O_2) & MAP sensors.

Fuel injection control using ECM-
ECM controls fuel injection by calculating A: F ratio needed for engine. Engine requires different air fuel ratios while cranking, warm up, idle, normal running, and sudden acceleration. As ECM receives inputs from various sensors such as like TPS, MAP, O_2 & other sensors, it calculates the injector pulse width that precisely meets the engine equirment.The ECM energizes the injector once for each piston intake stroke. The amount of fuel delivered by the injector is determined by the pulse width, or "on time" of the injector. The pulse width is measured in milliseconds (MS) and the fuel flow from the injector increases in relation to the pulse width.

	d)	**Discuss causes and remedies for following faults in CI engine:** **(i) Engine does not start or stalls just after starting** **(ii) Excessive fuel consumption.**	04
	Ans:	**Answer-** *(2mark each)* * (any other suitable causes & remedies can also be considered)	

I) Engine does not start or stalls just after starting-	
Causes-	**Remedies-**
i) Dirt or Moisture/ clogged fuel filter	i) Replace the filter.
ii) Defective fuel pump	ii) Check the fuel pump output, adjust if necessary.
iii) Clogged fuel lines	iii) Check fuel lines, clean or replace if necessary.
iv) Check batteries and connections to starter.	iv) Check for loose connection.
II) Excessive fuel consumption.	
Causes-	**Remedies-**
i) Over loading and disobeying the speed limits.	i) Reduce the load on engine, keep the speed stable consistent & use cruise control when appropriate.
ii) Poor vehicle maintenance	ii) Keep the engine in good condition by Regular inspection & servicing.
iii) Driving style/ habits	iii) Drive the vehicle with economy speed.
iv) Worn out tyres/Poor tyre pressure	iv) Replace the tyres /inflated the tyres with Correct pressure.

	e)	**Explain the working of diesel engine glow plugs with neat sketch**	**04**
		(sketch 2M, working 2M) Glow plug is an aid for cold starting of a C.I. engine. The self-ignition temperature of diesel is 250°C. For compression ignition, the charge (air + diesel) should reach a temperature of about 550°C. Cold weather conditions make it difficult to happen. So, a glow plug is used in Compression Ignition Engines. The glow plug heats to starting temperature (approx. 850°C) as rapidly as possible. **Operation of Glow Plug Circuit:** On modern vehicles, engine's central ECU controls- high electrical glow-plug current, indicator lamp, Safety over ride and automatic switching off the Glow- plugs. An ignition starter lock controls the current supply for the glow system. As the switch is actuated a relay connects the glow plug to the battery circuit, and the Indicator lamp comes on. When the lamp goes out turning the switch further to the starting position brings the engine to life. As long as the starter switch is held in the glow position, a holding circuit assures that the glow- plugs remain on. Then after starting, when the ignition switch is released, they are automatically switched off. A safety circuit prevents running the battery down if the engine fails to start immediately. After a maximum of 90 seconds glow time, current to the glow plugs is automatically interrupted. But starting may be attempted again as	

soon as the driver wishes.

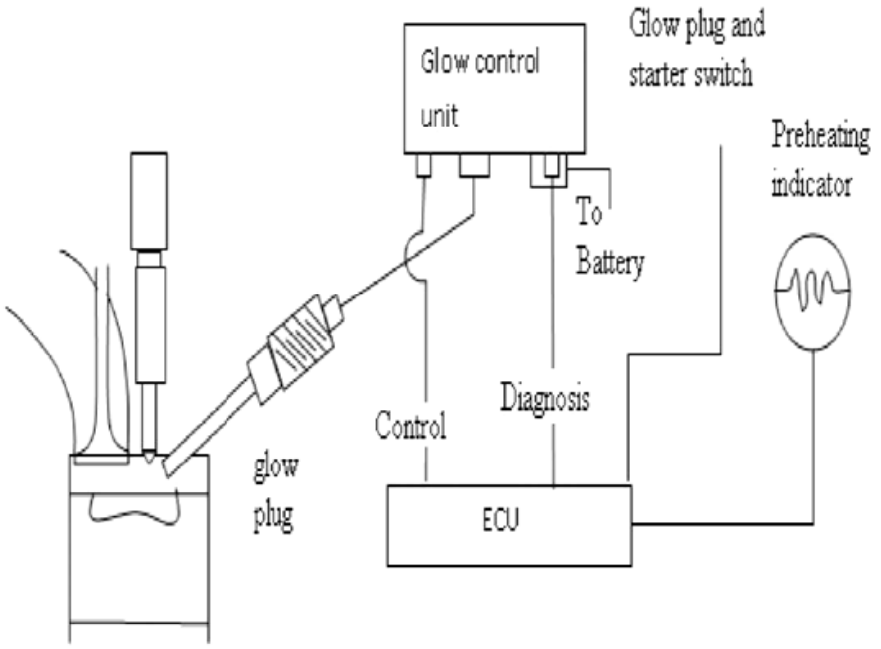

	f)	**Enlist advantages of CRDI system.**	**04**

Advantages of CRDI System: *(Any 4 - 1 mark each)*

1. Deliver 25% more power and torque than the normal direct injection engine.
2. Lower levels of noise and vibration.
3. Lower emissions.
4. Lower fuel consumption.
5. Improved performance.
6. Improved drivability

OR

Answer: Advantages of CRDI system

1) CRDI engine has lower emission. So, it meets latest emission norms. Finely atomized fuel results in an efficient air-fuel mixing & reduced particulate emissions.

2) It gives improved fuel economy.

3) CRDI engine has lower engine noise level. CRDI engines have capability to deliver stable, small pilot injections can be used for decreased NO_x emissions and noise.

4) Separation of pressure generation and injection allowing flexibility in controlling both the injection rates and timing of CRDI.

5) In CRDI system, Common rail pressure does not depend on the engine speed and load conditions.

6) In CRDI, High injection pressures (about 1500 bar) and good spray preparations are possible even at low engine speeds and loads.

7) In CRDI system, Fuel pump operates with low drive torque.

4		**Attempt any THREE of the following.**	**12**
	a)	**Enlist the advantages and disadvantages of bio-diesel with respect to emission and performance.**	**04**

Ans:

Advantages with respect to emission – (any one 1M)	1. It has lower exhaust emission
	2. It is non-toxic.
	3. It is free of sulphur & aromatics
Disadvantages with respect to emission- (any one 1M)	1. It increases NOx Emissions which contribute to formation of smog.
	2. It also breakdowns rubber components.
Advantages with respect to performance- (any one 1M)	1.It is renewable substitute fuel for petroleum Diesel.
	2. It can be used in any diesel engine without modification.
Disadvantages with respect to Performance- (any one 1M)	1.In some engines, slight decrease in power and increases in fuel consumption has also been noticed.

b)	**Compare the following fuels on the basis of calorific value and knocking. LPG, CNG and bio-diesel**	**04**

Ans:

Parameter	LPG	CNG	Bio-diesel
Calorific value	46.4MJ/Kg LPG has consistent & higher calorific value.	52.34 MJ/Kg Which is higher than LPG.	37.27 MJ/Kg this 9% lower than regular petro diesel
knocking	It is highly knocking resistant and does not pre-ignite easily as compared with petrol. Its octane rating is 111.	CNG is having high knock resistant than LPG & Petrol. Its octane number is 130.	Cetane number for Bio-diesel is 48 to 65 which is higher than petro-diesel. So intensity of knocking is less in biodiesel compared to petro diesel.

	c)	**Discuss the advantages and limitations of electric Vehicles.**	**04**
		Answer: ***(advantage 2marks, Limitations 2 marks)*** **Advantages:** ***(Any two points)*** 1. Rapid acceleration 2. Noise free operation 3. No exhaust fumes 4. High reliability 5. Easy maintenance 6. Regenerating braking 7. No loss power in idling. 8. Easy to drive **Limitations:** ***(Any two points)*** 1. Need to charge the batteries. 3. More expensive to replace the batteries. 3. Not suitable for heavy vehicles 4. Life of batteries quite short 5. Limited power 6. The top speed is quite low.	
	d)	**What is GDI? State its advantages.**	04
	Ans:	*(GDI-2M, Advantages- 2M)* Gasoline Direct Injection (GDI), also known as Petrol Direct Injection. This system is employed in modern two-stroke and four-stroke gasoline engines. The gasoline is highly pressurized, and injected via a common rail fuel line directly into the combustion chamber of each cylinder, Directly injecting fuel into the combustion chamber requires high pressure injection. The GDI engines operate on full air intake; there is no air throttle plate. Engine speed is controlled by the engine control unit. In this only the combustion air flows through open intake valve on the induction stroke. The engine management system continually chooses among three combustion modes: ultra lean burn, stoichiometric, and full power output. Each mode is characterized by the air-fuel ratio. The stoichiometric air-fuel ratio for gasoline is 14.7:1 by weight, but ultra-lean mode can involve ratios as high as 65:1 (or even higher in some engines, for very limited periods).These mixtures are much leaner than in a conventional engine and reduce fuel consumption considerably. **Advantages -(any two)** 1.8-22% higher fuel economy. 2. More torque & horsepower allowing smaller engines. 3. Compression ratio can be higher. 4. Lower CO_2 emission levels. 5. Spark Knock is much more controlled. 6. Leaner fuel mixtures during operation.	

	(B)	**Attempt any ONE.**	**06**
	(a)	**Explain the working of electronically controlled diesel injection pump.**	**06**
	Ans	(Sketch-3M, Working 3M) **Electronically controlled diesel injection pump:** This is similar to conventional pumps, but its injection is controlled by Electronic Control Unit (ECU) which control solenoid valve in the injection pump**.** The pump speed and timing sensor is mounted on the end of the pump camshaft. The ECU receives signals like accelerator pedal position, engine and road speeds, gear selected, start of injection, control rod position, induction manifold, and fuel temperatures etc. Generally ECU output is the current to the solenoid valve for actuating the pump control rod, and to the injection advance and retard mechanism. Based on these data, the ECU accordingly modifies the current to the solenoid valve, to supply fuel as per requirement. 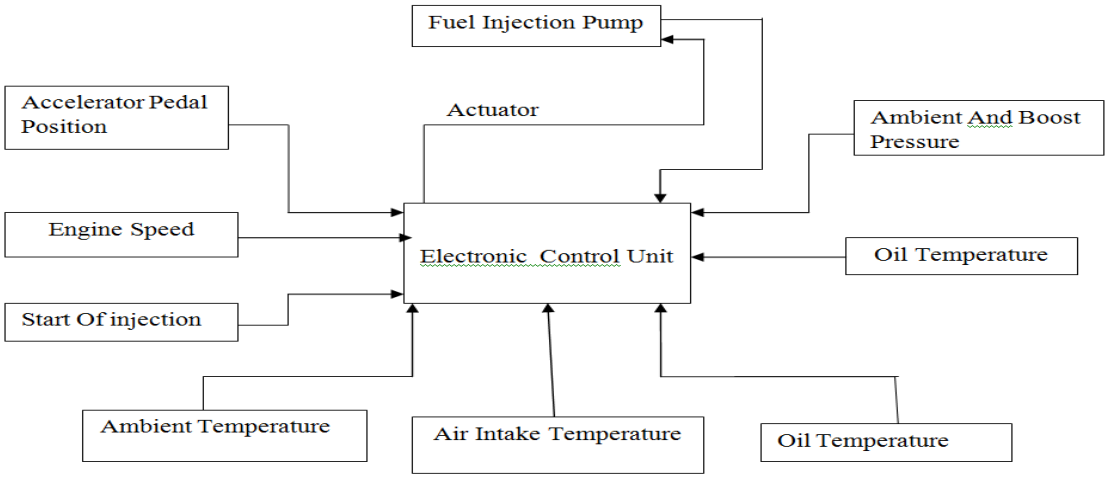 	
	(b)	**Draw a neat sketch of LPG conversion kit and explain its working.**	**06**
	Ans	**Answer:** *(Description 3Marks, Figure 3 Marks)* **Working of CNG Kit:** The Sequential Injection system still has a high pressure tank, filler, filter and regulator, the regulator is different in that it puts out a steady pressure as opposed to variable pressure. The Natural Gas is then injected by natural gas injectors which are controlled by the gasoline injector pulse. This system also uses its own MAP (manifold absolute pressure) sensor, natural gas pressure sensor, natural gas temperature sensor and coolant temperature sensor to operate and control the system.	

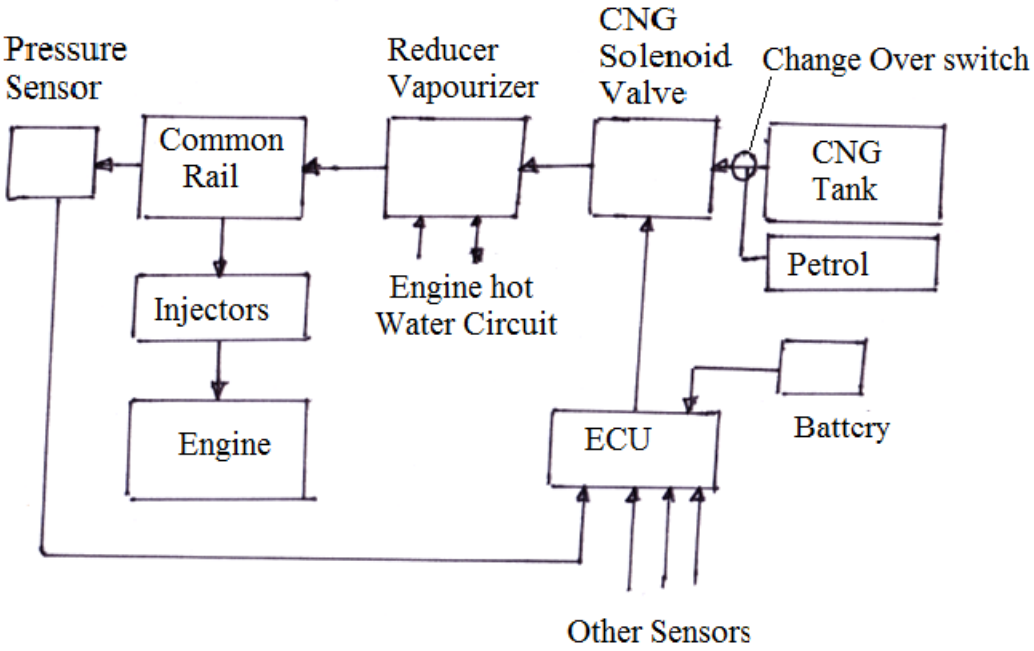

Figure: CNG Kit

05		**Attempt any TWO:**	**16**
	(a)	**Explain the effect of the following engine variables on ignition lag and flame propagation: (i) cylinder size (ii) cylinder wall temperature (iii) compression ratio and (iv) inlet air temperature**	**08**
	Ans:	*: (Each 2M)* **(i) Cylinder size -** Engine of similar design generally run at the same speed. This is achieved by smaller engine having larger RPM and larger engines having smaller RPM. Due to the same piston speed, the inlet velocity, the degree of turbulence and flame speed are nearly same in similar engines regardless of the size. i.e. the number of crank degrees required for flame travel will be about the same irrespective of engine size, provided the engine are similar. **(ii) Cylinder wall temperature-** As the temperature of cylinder wall increases it reduces ignition lag & flame propagation will increases. **iii) Compression ratio-** A higher compression ratio increases the pressure and temperature of the working mixture and decreases the concentration of the residual gases. These favorable conditions reduce the ignition lag of combustion. High pressure and temperature of the compressed mixture speeds up the flame propagation. **(iv) Inlet air temperature-** Increasing the intake temperature and pressure increasing the compression ratio and retarding the spark, all reduces the ignition lag. Pre-increase in the intake temperature and pressure increases the flame speed.	

	b)	**List the actuators used in MPFI system and working of any one.**	08

(List 2M, any one Actuators sketch 3M & Description 3M)

Actuators of MPFI-

1.Fuel Injector
2. Idle speed control valve.
3. Inlet metering valve.
4. Vacuum solenoid valve
5. Cam actuators.

Fuel Injector-In MPFI system, Top feed fuel Injector is used. These injectors are solenoid-operated valves that are opened and closed by means of electric pulses from the ECU. The injectors are mounted in the intake manifold and spray onto the back of the intake valves. In general, one injector is used for each cylinder. The injected fuel mass is determined by the injector opening time (for a given pressure drop across the injector). In MPFI systems, each engine cylinder is assigned an electromagnetic fuel injector, which is activated individually for each cylinder. In this way, both the fuel mass appropriate to each cylinder and the correct start of injection are calculated by the control unit (ECU).

The amount of fuel sprayed from the injectors is controlled by cycling the injectors open and close. More fuel will be sprayed out when the injector pulse is longer. In order to operate properly, the fuel must spray as a liquid throughout the injection. Injection pressure is approximately 2 bar to 3.5 bar. Pressure helps to keep the fuel as a liquid throughout the system. When the solenoid coil is energized, the Pintle is pulled up. System pressure then forces fuel between the Pintle and discharge opening to form a fine spray pattern that has a cone shape.

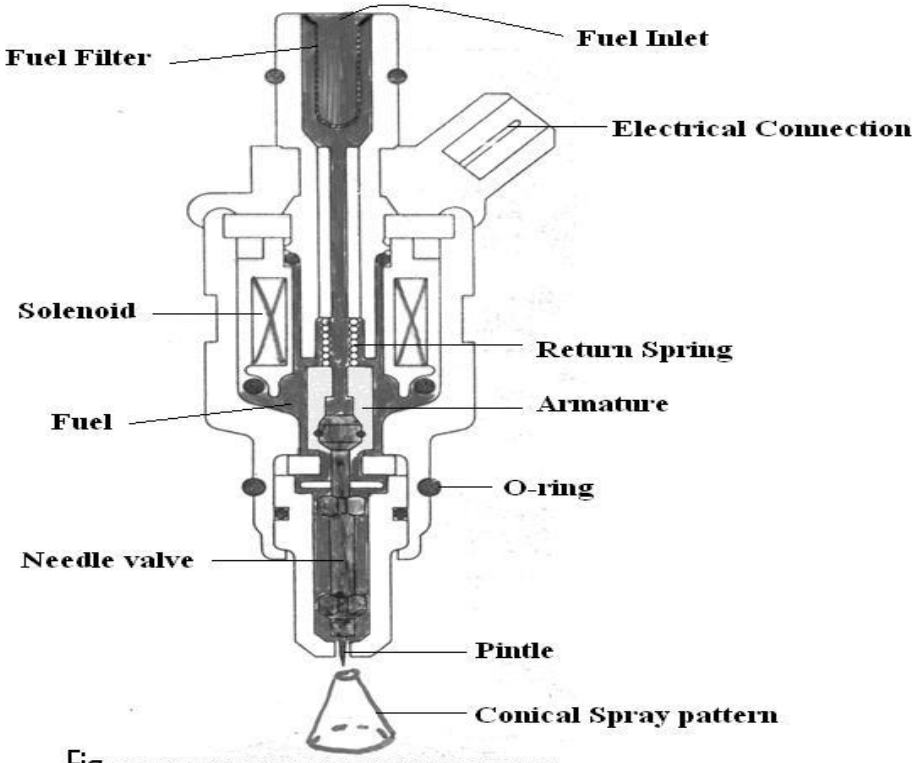

Fig. TOP FEED FUEL INJECTOR

	(c)	**Illustrate with neat sketch the process to control production of NOx in combustion chamber.**	08
		(*Sketch-4M & Description 4M)* **Method to control NO_x:** The EGR system is used to reduce the amount of NO_x in the exhaust. NO_x production increases as the temperature inside the combustion chamber rises due to acceleration or heavy engine loads, because high temperature encourages the nitrogen and oxygen in air to combine. Therefore, the best way to decrease the production of NO_x is to hold down the temperature in the combustion chamber. The EGR system re-circulates exhaust gases through the intake manifold in order to reduce the temperature at which combustion takes place. When the air: fuel mixture & exhaust gases are mixed together, the proportion of fuel in the air: fuel mixture naturally falls (mixture becomes leaner), & in addition, some of the heat produced by combustion of this mixture is carried away by the exhaust gas. The maximum temperature attained in the combustion chamber therefore falls, reducing the amount of NO_x produced. The EGR system allows a small amount of exhaust gas (less than 10% of total) to be supplied into the incoming air: fuel mixture. 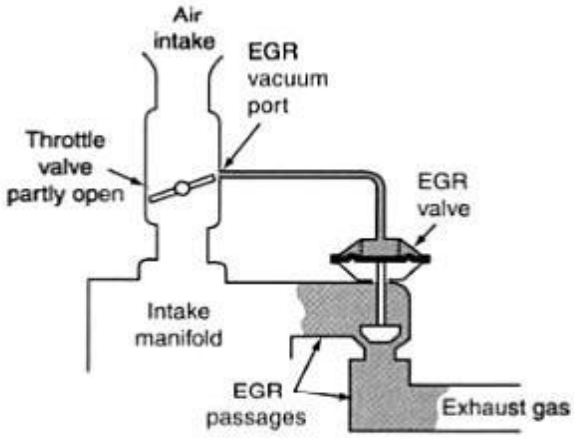 Fig: Exhaust gas recirculation system controls the amount of exhaust flowing back into the intake manifold	
06		**Attempt any FOUR of the following.**	16
	a)	**Explain how VTEC is beneficial over VVT.**	04
		(01 M each) VTEC stands for Variable valve timing and electronic lift control. In VTEC, the valve timing and the valve lift is controlled using ECU to provide efficient breathing of engine and efficient performance of engine. **Advantages:** 1) Increased fuel efficiency and 2) High power output. 3) Emissions levels can also be more accurately controlled with the GDI system. 4) Improved Volumetric Efficiency 5) GDI allows a high compression ratio of 12, and thus improved combustion efficiency 6) GDI is capable of using very lean mixture i.e. 65:1 while using VTEC Improve drivability	

	b)	**Enlist various pollutants from the gasoline engines. State their effect on environment.**	04

(Enlist 1M effect 3M)

Answer: Major Pollutants from Gasoline engine exhaust.

Pollutant	Environmental Effect of Pollutants
1. Hydrocarbons	They play an important role in forming NO2 and O3 which are health and environmental hazards.
2. Carbon Monoxide	CO is a highly poisonous gas that can cause dizziness, headaches, impaired thinking, and death by O2 starvation. It can affect the central nervous system, impairing physical coordination, vision and judgment, creating nausea and headaches, reducing worker productivity and increasing personal discomfort.
3. Carbon dioxide	CO2 is a greenhouse gas and may be the major cause of global warming.
4. Oxides of Nitrogen	NO is unhealthy and contributes to the greenhouse effect. NO2 is a very toxic gas and contributes to the formation of smog, ozone, and acid rain.

	c)	**Explain any two engine modifications and two fuel modifications to control emission from gasoline engine.**	**04**

(Any two point each 2M)

Methods used for improving the exhaust emission under the engine design modification are

1. Use of leaner air-fuel ratios: The carburetor may be modified to provide relatively lean air fuel mixtures during idling and cruise operation. With this modification, idle speed needs to be increased to prevent stalling and rough idle. Fuel distribution is improved by better manifold design, Inlet air heating, raising of coolant temperature and use of electronic fuel injection system.

2. Retarding Ignition timing: The controls are designed to retard the spark timing at idle and providing normal spark advance during acceleration and cruising. Retarding spark reduces NOx. Emission. It also reduces HC emission.

3. Modification of combustion chamber: Modification in combustion chamber is attempted to avoid flame quenching zones, resulting in HC emission. This includes reducing surface to volume ratio, reduced squish area, reduced deal space around piston ring and reduced distance of the top piston ring from the top of the piston.

4. Lower compression ratio: The lower compression ratio reduces the quenching effect by reducing quenching area reducing HC. It also reduces NOx. Emission. Reducing compression ratio results in some loss of power and fuel economy.

5. Reduced valve overlap: Increased valve overlap allows some mixture to escape directly to increase emission level. This can be controlled by reducing valve overlap.

6. Alterations in induction system: The supply of designed air fuel ratio to all cylinders under all operating conditions can be affected by alterations in induction. This includes inlet air heating, use of carburetor with closer tolerances and using special type of carburetors. This also includes fuel injection in manifold.

Fuel modification:-

1. Lead free fuel: Fuel must be such that it should not have any Sulphur, otherwise it leads to many operating difficulties and produce undesirable pollutants.

2. Fuel Volatility: Fuel volatility is compromise of high volatility and low volatility to control the pollution

	d)	**What is EGR? Explain with the help of block diagram.**	**04**

Exhaust Gas Recirculation Valve *(Operation-2 marks, Sketch-2 marks)*
When the engine is idling, the EGR valve is closed and there is no EGR flow into the manifold. The EGR valve remains closed until the engine is warm and is operating under load. As the load increases and combustion temperatures start to rise, the EGR valve opens and starts to leak exhaust back into the intake manifold. This has a quenching effect that lowers combustion temperatures and reduces the formation of NOx.

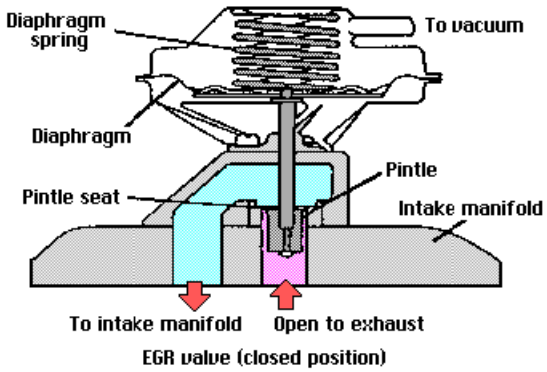

OR

Exhaust Gas Recirculation Valve The EGR system is used to reduce the amount of NOx in the exhaust. Nox production increases as the temperature inside the combustion chamber rises due to acceleration or heavy engine loads, because high temperature encourages the nitrogen and oxygen in air to combine. Therefore, the best way to decrease the production of Nox is to hold down the temperature in the combustion chamber. The EGR system re-circulates exhaust gases through the intake manifold in order to reduce the temperature at which combustion takes place. When the air: fuel mixture & exhaust gases are mixed together, the proportion of fuel in the air: fuel mixture naturally falls (mixture becomes leaner), & in addition, some of the heat produced by combustion of this mixture is carried away by the exhaust gas. The maximum temperature attained in the combustion chamber therefore falls, reducing the amount of Nox produced. The EGR system allows a small amount of exhaust gas (less than 10% of total) to be supplied into the incoming air: fuel mixture

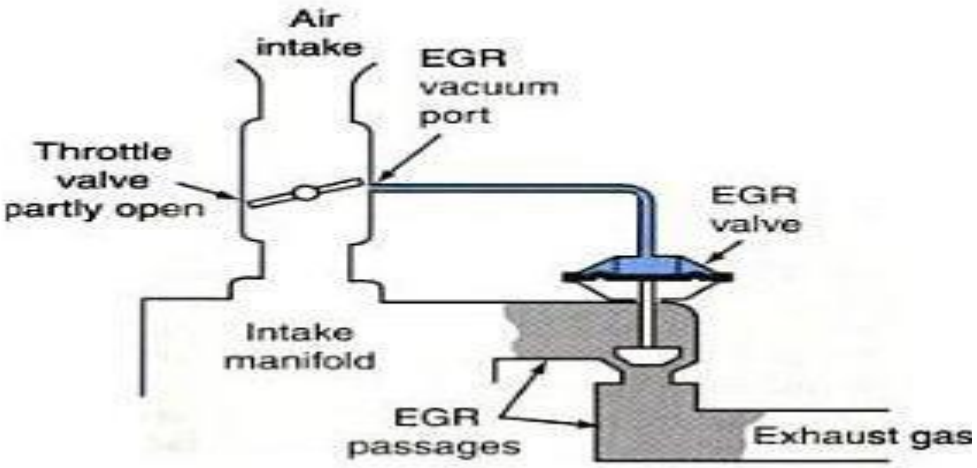

Exhaust Gas Recirculation

	e)	**Explain the effect of positive crankcase ventilation (PCV) system on engine emission.**	**04**
		(Description 2M, Sketch 2M) **PCV system:** The purpose of PCV system is to remove the harmful gases from the crankcase before damage occurs and combine them with the engine's normal incoming air: fuel mixture. PCV system uses a variable flow PCV valve accurately matches ventilation flow with blow-by production characteristics. By accurately matching these two factors, crankcase ventilation performance is optimized, while engine performance and drivability remains unaffected 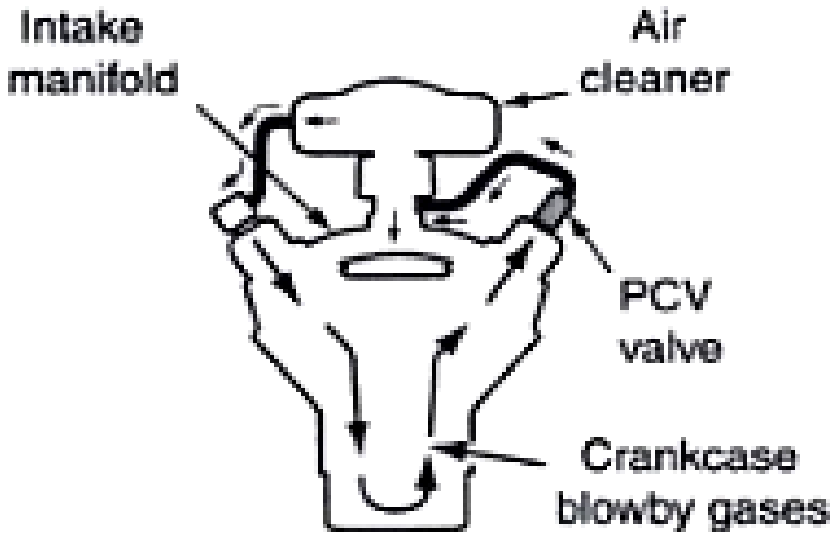 **positive crankcase ventilation**	